Form 1 - Vendor's statement

(Section 7 *Land and Business (Sale and Conveyancing) Act 1994*)

Contents

Preliminary

Part A - Parties and land

Part B - Purchaser's cooling-off rights and proceeding with the purchase

Part C - Statement with respect to required particulars

Part D - Certificate with respect to prescribed inquiries by registered agent ☑

Schedule

Preliminary

To the purchaser:

The purpose of a statement under section 7 of the *Land and Business (Sale and Conveyancing) Act 1994* is to put you on notice of certain particulars concerning the land to be acquired.

If you intend to carry out building work on the land, change the use of the land or divide the land, you should make further inquiries to determine whether this will be permitted. For example, building work may not be permitted on land not connected to a sewerage system or common drainage scheme if the land is near a watercourse, dam, bore or the River Murray and Lakes.

The *Aboriginal Heritage Act 1988* protects any Aboriginal site or object on the land. Details of any such site or object may be sought from the "traditional owners" as defined in that Act.

If you desire additional information, it is up to you to make further inquiries as appropriate.

Instructions to the vendor for completing this statement:

☐ *means the Part, Division, particulars or item may not be applicable.*

If it is applicable, ensure the box is ticked and complete the Part, Division, particulars or item.

If it is not applicable, ensure the box is empty or strike out the Part, Division, particulars or item. Alternatively, the Part, Division, particulars or item may be omitted, but not in the case of an item or heading in the table of particulars in Division 1 of the Schedule that is required by the instructions at the head of that table to be retained as part of this statement.

** means strike out or omit the option that is not applicable.*

All questions must be answered with a YES or NO (inserted in the place indicated by parentheses below or to the side of the question).

If there is insufficient space to provide any particulars required, continue on attachments.

Part A—Parties and land

1. Purchaser:

Address:
Street 1:

Suburb: State: Postcode:

2. Purchaser's registered agent: ☐

Address:
Street 1

~~Suburb: State: Postcode:~~

3. Vendor:
Darren Shane Keegan and Anna Segreto

Address:
Street 1: 18 Nalimba Avenue Para Vista SA 5093 and 27 Parkway Avenue Mount Gambier SA 5290 respectively

Suburb: State: Postcode:

4. Vendor's registered agent: ☑
Klemich Real Estate Pty Ltd (A.C.N. 101 825 147)
T/A Klemich Real Estate RLA 174424

Address:
Street 1: 1/245 Fullarton Road

Suburb: Eastwood State: SA Postcode: 5063

5. Date of contract: (if made before this statement is served)

6. Description of the land: (*Identify the land including any certificate of title reference)*
Lot 23 Secondary Community Strata Plan 41146 in the area named Kent Town Hundred of Adelaide

Street 1: 23/58 King William Street

Suburb: Kent Town State: SA Postcode: 5067

being the *whole / ~~portion~~ of the land comprised in Certificate of Title
Volume 6200 Folio 70

Part B—Purchaser's cooling-off rights and proceeding with the purchase

To the purchaser:

Right to cool-off

(section 5)

1. Right to cool-off and restrictions on that right

You may notify the vendor of your intention not to be bound by the contract for the sale of the land UNLESS:

(a) you purchased by auction; or

(b) you purchased on the same day as you, or some person on your behalf, bid at the auction of the land; or

(c) you have, before signing the contract, received independent advice from a legal practitioner and the legal practitioner has signed a certificate in the prescribed form as to the giving of that advice; or

(d) you are a body corporate and the land is not residential land; or

(e) the contract is made by the exercise of an option to purchase not less than 5 clear business days after the grant of the option and not less than 2 clear business days after service of this form; or

(f) the sale is by tender and the contract is made not less than 5 clear business days after the day fixed for the closing of tenders and not less than 2 clear business days after service of this form; or

(g) the contract also provides for the sale of a business that is not a small business.

2. Time for service

The cooling-off notice must be served:

(a) if this form is served on you before the making of the contract—before the end of the second clear business day after the day on which the contract was made; or

(b) if this form is served on you after the making of the contract—before the end of the second clear business day from the day on which this form is served.

However, if this form is not served on you at least 2 clear business days before the time at which settlement takes place, the cooling-off notice may be served at any time before settlement.

3. Form of cooling-off notice

The cooling-off notice must be in writing and must be signed by you.

4. Methods of service

The cooling-off notice must be:

(a) given to the vendor personally; or

(b) posted by registered post to the vendor at the following address:

18 Nalimba Avenue Para Vista SA 5093 or PO Box 8724 Mount Gambier East SA 5291

(being the vendor's last known address); or

(c) transmitted by fax or email to the following fax number or email address:

ang@klemich.com.au

(being a number or address provided to you by the vendor for the purpose of service of the notice); or

(d) left for the vendor's agent (with a person apparently responsible to the agent) at, or posted by registered post to the agent at, the following address:

1/245 Fullarton Road Eastwood SA 5063

(being *****the agent's address for service under the *Land Agents Act 1994* /~~an address nominated by the agent to you for the purpose of service of the notice~~).

Note:

Section 5(3) of the *Land and Business (Sale and Conveyancing) Act 1994* places the onus of proving the giving of the cooling-off notice on the purchaser. It is therefore strongly recommended that:

(a) if you intend to serve the notice by leaving it for the vendor's agent at the agent's address for service or an address nominated by the agent, you obtain an acknowledgment of service of the notice in writing;

(b) if you intend to serve the notice by fax or email, you obtain a record of the transmission of the fax or email.

5. Effect of service

If you serve such cooling-off notice on the vendor, the contract will be taken to have been rescinded at the time when the notice was served. You are then entitled to the return of any money you paid under the contract other than:

(a) the amount of any deposit paid if the deposit did not exceed $100; or

(b) an amount paid for an option to purchase the land.

Proceeding with the purchase

If you wish to proceed with the purchase:

(a) it is strongly recommended that you take steps to make sure your interest in the property is adequately insured against loss or damage; and

(b) pay particular attention to the provisions in the contract as to time of settlement - it is essential that the necessary arrangements are made to complete the purchase by the agreed date - if you do not do so, you may be in breach of the contract; and

(c) you are entitled to retain the solicitor or registered conveyancer of your choice.

Part C—Statement with respect to required particulars

(section 7(1))

To the purchaser:

***I**/We, Darren Shane Keegan and Anna Segreto

of 18 Nalimba Avenue Para Vista SA 5093 and 27 Parkway Avenue Mount Gambier SA 5290 respectively

being the *vendor(s) / ~~person authorised to act on behalf of the vendor(s)~~ in relation to the transaction state that the Schedule contains all particulars required to be given to you pursuant to section 7(1) of the *Land and Business (Sale and Conveyancing) Act 1994.*

Date: _____ Date: _____

Signed: Signed:

Date: _____ Date: _____

Signed: Signed:

Part D—Certificate with respect to prescribed inquiries by registered agent ☑

(section 9)

To the purchaser:

I, Christine Bertram of Bertram Form 1 Shop Pty. Ltd. (A.C.N. 147 186 132)

certify ***that** the responses / ~~that, subject to the exceptions stated below, the responses~~ to the inquiries made pursuant to section 9 of the *Land and Business (Sale and Conveyancing) Act 1994* confirm the completeness and accuracy of the particulars set out in the Schedule.

Exceptions:

Date: 29/10/2026

Signed: 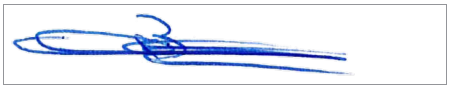

***~~Vendor's~~** / ~~Purchaser's agent~~

*Person authorised to act on behalf of *Vendor's/~~Purchaser's~~ agent

Schedule—Division 1—Particulars of mortgages, charges and prescribed encumbrances affecting the land (section 7(1)(b))

Note:

Section 7(3) of the Act provides that this statement need not include reference to charges arising from the imposition of rates or taxes less than 12 months before the date of service of the statement.

Where a mortgage, charge or prescribed encumbrance referred to in column 1 of the table below is applicable to the land, the particulars in relation to that mortgage, charge or prescribed encumbrance required by column 2 of the table must be set out in the table (in accordance with the instructions in the table) unless -

(a) there is an attachment to this statement and:
- (i) all the required particulars are contained in that attachment; and
- (ii) the attachment is identified in column 2; and
- (iii) if the attachment consists of more than 2 sheets of paper, those parts of the attachment that contain the required particulars are identified in column 2; or

(b) the mortgage, charge or prescribed encumbrance:
- (i) is 1 of the following items in the table:
  - (A) under the heading 1. General:
    - 1.1 Mortgage of land
    - 1.4 Lease, agreement for lease, tenancy agreement or licence
    - 1.5 Caveat
    - 1.6 Lien or notice of a lien
  - (B) under the heading 36. Other charges:
    - 36.1 Charge of any kind affecting the land (not included in another item); and
- (ii) is registered on the certificate of title to the land; and
- (iii) is to be discharged or satisfied prior to or at settlement.

Table of particulars

Column 1 **Column 2** **Column 3**

(If an item is applicable, ensure that the box for the item is ticked and complete the item.)

(If an item is not applicable, ensure that the box for the item is empty or else strike out the item or write "NOT APPLICABLE" or "N/A" in column 1. Alternatively, the item and any inapplicable heading may be omitted, but not in the case of:

(a) the heading "1. General" and items 1.1, 1.2, 1.3 and 1.4; and

(b) the heading "5. Development Act 1993 (repealed)" and item 5.1; and

(c) the heading "6. Repealed Act conditions" and item 6.1; and

(d) the heading "29. Planning, Development and Infrastructure Act 2016" and items 29.1 and 29.2,

which must be retained as part of this statement whether applicable or not.)

*(If an item is applicable, all particulars requested in column 2 must be set out in the item unless the Note preceding this table otherwise permits. Particulars requested in **bold type** must be set out in column 3 and all other particulars must be set out in column 2.)*

(If there is more than 1 mortgage, charge or prescribed encumbrance of a kind referred to in column 1, the particulars requested in column 2 must be set out for each such mortgage, charge or prescribed encumbrance.)

(If requested particulars are set out in the item and then continued on an attachment due to insufficient space, identify the attachment in the place provided in column 2. If all of the requested particulars are contained in an attachment (instead of in the item) in accordance with the Note preceding this table, identify the attachment in the place provided in column 2 and (if required by the Note) identify the parts of the attachment that contain the particulars.)

1. General

1.1 Mortgage of land

*(**Note:** Do not omit this item. The item and its heading must be included in the statement even if not applicable.)*

Is this item applicable? ☑

Will this be discharged or satisfied prior to or at settlement? YES

Are there attachments? NO

If YES, identify the attachment(s):
(and, if applicable, the part(s) containing the particulars)

Number of mortgage: (if registered)

14006087

Name of mortgagee:

Bendigo & Adelaide Bank Ltd

1.2 Easement

(whether over the land or annexed to the land)

Note: "Easement" includes rights of way and party wall rights

*(**Note:** Do not omit this item. This item and its heading must be included in the statement even if not applicable.)*

Is this item applicable? ☑

Will this be discharged or satisfied prior to or at settlement? NO

Are there attachments? YES

If YES, identify the attachment(s):
(and, if applicable, the part(s) containing the particulars)

Property Interest Report - Page 12

Description of land subject to easement:

CT Volume 6200 Folio 70

Nature of easement:

Statutory Easements

Are you aware of any encroachment on the easement?

NO

If YES, give details:

If there is an encroachment, has approval for the encroachment been given?

If YES, give details:

1.3 Restrictive covenant

*(**Note:** Do not omit this item. This item and its heading must be included in the statement even if not applicable.)*

~~***Is this item applicable?***~~ ☐

Will this be discharged or satisfied prior to or at settlement?

Are there attachments?

If YES, identify the attachment(s):
(and, if applicable, the part(s) containing the particulars)

Nature of restrictive covenant:

Name of person in whose favour restrictive covenant operates:

Does the restrictive covenant affect the whole of the land being acquired?

If NO, give details:

Does the restrictive covenant affect land other than that being acquired?

1.4 Lease, agreement for lease, tenancy agreement or licence

(The information does not include information about any sublease or subtenancy. That information may be sought by the purchaser from the lessee or tenant or sublessee or subtenant.)

*(**Note:** Do not omit this item. This item and its heading must be included in the statement even if not applicable.)*

Is this item applicable? ☑

Will this be discharged or satisfied prior to or at settlement? NO

Are there attachments? YES

If YES, identify the attachment(s):
(and, if applicable, the part(s) containing the particulars)

Residential Tenancy Agreement & Lease Extension

Name of parties:

Landlord: Anna Segreto and Darren Keegan
Tenant: Om Prasad Dash and Rinita Shadangi

Period of lease, agreement for lease etc:

From 24/03/2025 to 23/03/2027

Amount of rent or licence fee:

$ 700.00 per week (period)

Is the lease, agreement for lease etc in writing?

YES

If the lease or licence was granted under an Act relating to the disposal of Crown lands, specify -

(a) the Act under which the lease or licence was granted:

(b) the outstanding amounts due: (including any interest or penalty)

5. *Development Act 1993* (repealed)

5.1 section 42 - Condition (that continues to apply) of a development authorisation

*(**Note** - Do not omit this item. This item and its heading must be included in the statement even if not applicable.)*

Is this item applicable? ☑

Will this be discharged or satisfied prior to or at settlement? NO

Are there attachments? YES

If YES, identify the attachment(s)
(and, if applicable, the part(s) containing the particulars):

City of Norwood Payneham & St Peters council search & State Planning Commission response

Condition(s) of authorisation:

Refer to Decision Notification Form for Development Application Number 155/754/2014 - Demolition of existing buildings and structures including one Local Heritage Place, removal of a regulated tree; and construction of a mixed use development comprising 54 residential dwellings, 3 SoHo products, a retail store and commercial offices, together with above ground car parking and related works & 155/M002/14 Rev 2 - Minor variation lodged 31 March 2015 pursuant to regulation 47A of the Development Regulations 2008. Consent Stage 4 - CLT structural elements, external fabric, internal fit-out & balance of external works. Consent Stage 3 - Superstructure including Level 3 slab. Consent Stage 2 - Substructure, Civil & Services works. Stage 1 approval - Demolition of existing buildings and structures including one Local Heritage place, removal of a Regulated Tree.

6. Repealed Act conditions

6.1 Condition (that continues to apply) of an approval or authorisation granted under the *Building Act 1971* (repealed), the *City of Adelaide Development Control Act 1976* (repealed), the *Planning Act 1982* (repealed) or the *Planning and Development Act 1967* (repealed)

*(**Note** - Do not omit this item. This item and its heading must be included in the statement even if not applicable.)*

Is this item applicable? ☐

Will this be discharged or satisfied prior to or at settlement?

Are there attachments?

If YES, identify the attachment(s):
(and, if applicable, the part(s) containing the particulars)

Nature of condition(s):

7. *Emergency Services Funding Act 1998*

7.1 section 16 - Notice to pay levy

Is this item applicable? ☑

Will this be discharged or satisfied prior to or at settlement? YES

Are there attachments? YES

If YES, identify the attachment(s):
(and, if applicable, the part(s) containing the particulars)

Certificate of Emergency Services Levy payable

Date of notice:

15/09/2026

Amount of levy payable:

$136.80

29. *Planning, Development and Infrastructure Act 2016*

29.1 Part 5 - Planning and Design Code

*(**Note** - Do not omit this item. The item and its heading must be included in the attachment even if not applicable.)*

Is this item applicable? ☑

Will this be discharged or satisfied prior to or at settlement? NO

Are there attachments? YES

If YES, identify the attachment(s):
(and, if applicable, the part(s) containing the particulars)

City of Norwood Payneham & St Peters Council search - 31 pages

Title or other brief description of zone, subzone and overlay in which the land is situated: (as shown in the Planning and Design Code)

Zone: Urban Corridor (Business) (UC(Bu))
Overlays as per Data Extract for Section 7 search purposes included in City of Norwood Payneham & St Peters council search

Is there a State heritage place on the land or is the land situated in a State heritage area?	NO
Is the land designated as a local heritage place?	NO
Is there a tree or stand of trees declared in Part 10 of the Planning and Design Code to be a significant tree or trees on the land?	NO
Is there a current amendment to the Planning and Design Code released for public consultation by a designated entity on which consultation is continuing or on which consultation has ended but whose proposed amendment has not yet come into operation?	YES

Note - For further information about the Planning and Design Code *https://code.plan.sa.gov.au*.

29.2 section 127 - Condition (that continues to apply) of a development authorisation

*(**Note** - Do not omit this item. The item and its heading must be included in the attachment even if not applicable.)*

~~***Is this item applicable?***~~ ☐

Will this be discharged or satisfied prior to or at settlement?

Are there attachments?

If YES, identify the attachment(s):
(and, if applicable, the part(s) containing the particulars)

Date of authorisation:

Name of relevant authority that granted authorisation:

Condition(s) of authorisation:

29.3 section 139 - Notice of proposed work and notice may require access

~~***Is this item applicable?***~~ ☐

Will this be discharged or satisfied prior to or at settlement?

Are there attachments?

If YES, identify the attachment(s):
(and, if applicable, the part(s) containing the particulars)

Date of notice:

Name of person giving notice of proposed work:

Building work proposed: (as stated in the notice)

Other building work as required pursuant to the Act:

29.4 section 140 - Notice requesting access

~~***Is this item applicable?***~~ ☐

Will this be discharged or satisfied prior to or at settlement?

Are there attachments?

If YES, identify the attachment(s):
(and, if applicable, the part(s) containing the particulars)

Date of notice:

Name of person requesting access:

Reason for which access is sought: (as stated in the notice)

Activity of work to be carried out:

29.5 section 141 - Order to remove or perform work

~~***Is this item applicable?***~~ ☐

Will this be discharged or satisfied prior to or at settlement?

Are there attachments?

If YES, identify the attachment(s):
(and, if applicable, the part(s) containing the particulars)

Date of order:

Terms of order:

Building work (if any) required to be carried out:

Amount payable: (if any)

29.6 section 142 - Notice to complete development

~~***Is this item applicable?***~~ ☐

Will this be discharged or satisfied prior to or at settlement?

Are there attachments?

If YES, identify the attachment(s):
(and, if applicable, the part(s) containing the particulars)

Date of notice:

Requirements of notice:

Building work (if any) required to be carried out:

Amount payable: (if any)

29.7 section 155 - Emergency order

~~***Is this item applicable?***~~ ☐

Will this be discharged or satisfied prior to or at settlement?

Are there attachments?

If YES, identify the attachment(s):
(and, if applicable, the part(s) containing the particulars)

Date of order:

Name of authorised officer who made order:

Name of authority that appointed the authorised officer:

Nature of order:

Amount payable: (if any)

29.8 section 157 - Fire safety notice

~~***Is this item applicable?***~~ ☐

Will this be discharged or satisfied prior to or at settlement?

Are there attachments?

If YES, identify the attachment(s):
(and, if applicable, the part(s) containing the particulars)

Date of notice:

Name of authority giving notice:

Requirements of notice:

Building work (if any) required to be carried out:

Amount payable: (if any)

29.9 section 192 or 193 - Land management agreement

~~***Is this item applicable?***~~ ☐

Will this be discharged or satisfied prior to or at settlement?

Are there attachments?

If YES, identify the attachment(s):
(and, if applicable, the part(s) containing the particulars)

Date of agreement:

Names of parties:

Terms of agreement:

29.10 section 198(1) - Requirement to vest land in a council or the Crown to be held as open space

~~***Is this item applicable?***~~ ☐

Will this be discharged or satisfied prior to or at settlement?

Are there attachments?

If YES, identify the attachment(s):
(and, if applicable, the part(s) containing the particulars)

Date requirement given:

Name of body giving requirement:

Nature of requirement:

Contribution payable: (if any)

29.11 section 198(2) - Agreement to vest land in a council or the Crown to be held as open space

~~***Is this item applicable?***~~ ☐

Will this be discharged or satisfied prior to or at settlement?

Are there attachments?

If YES, identify the attachment(s):
(and, if applicable, the part(s) containing the particulars)

Date of agreement:

Names of parties:

Terms of agreement:

Contribution payable: (if any)

29.12 Part 16 Division 1 - Proceedings

~~***Is this item applicable?***~~ ☐

Will this be discharged or satisfied prior to or at settlement?

Are there attachments?

If YES, identify the attachment(s):
(and, if applicable, the part(s) containing the particulars)

Date of commencement of proceedings:

Date of determination or order: (if any)

Terms of determination or order: (if any)

29.13 section 213 - Enforcement notice

~~***Is this item applicable?***~~ ☐

Will this be discharged or satisfied prior to or at settlement?

Are there attachments?

If YES, identify the attachment(s):
(and, if applicable, the part(s) containing the particulars)

Date notice given:

Name of designated authority giving notice:

Nature of directions contained in notice:

Building work (if any) required to be carried out:

Amount payable: (if any)

29.14 section 214(6), 214(10) or 222 - Enforcement order

~~***Is this item applicable?***~~ ☐

Will this be discharged or satisfied prior to or at settlement?

Are there attachments?

If YES, identify the attachment(s):
(and, if applicable, the part(s) containing the particulars)

Date order made:

Name of court that made order:

Action number:

Names of parties:

Terms of order:

Building work (if any) required to be carried out:

Particulars relating to community lot (including strata lot) or development lot ☑

1. Name of community corporation: Community Corporation No. 41146 Incorporated
   Address of community corporation: La Verde, 58 King William Street Kent Town SA 5067

2. Application must be made in writing to the community corporation for the particulars and documents referred to in 3 and 4. Application must also be made in writing to the community corporation for the documents referred to in 6 unless those documents are obtained from the Lands Titles Registration Office.

3. Particulars supplied by the community corporation or known to the vendor:

   (a) particulars of contributions payable in relation to the lot:
   (including details of arrears of contributions related to the lot)

   Administration Fund: $1,268.44 per quarter
   Sinking Fund: $2.65 per quarter
   Refer to Munro Property Group search attached

   (b) particulars of assets and liabilities of the community corporation:

   Refer to Munro Property Group search attached.

   (c) particulars of expenditure that the community corporation has incurred, or has resolved to incur, and to which the owner of the lot must contribute, or is likely to be required to contribute:

   Refer to Munro Property Group search attached

   (d) if the lot is a development lot, particulars of the scheme description relating to the development lot and particulars of the obligations of the owner of the development lot under the development contract:

   N/A

   (e) if the lot is a community lot, particulars of the lot entitlement of the lot:

   205 of 10,000

   (If any of the above particulars have not been supplied by the community corporation by the date of this statement and are not known to the vendor, state "not known" for those particulars.)

4. Documents supplied by the community corporation that are enclosed:

   (a) a copy of the minutes of the general meetings of the community corporation and management committee *****for the 2 years preceding this statement / ~~since the deposit of the community plan~~;
   *(*Strike out or omit whichever is the greater period)*

   YES

   (b) a copy of the statement of accounts of the community corporation last prepared;

   YES

   (c) a copy of current policies of insurance taken out by the community corporation.

   YES

   (For each document indicate (YES or NO) whether or not the document has been supplied by the community corporation by the date of this statement.)

5. If "not known" has been specified for any particulars in 3 or a document referred to in 4 has not been supplied, set out the date of the application made to the community corporation and give details of any other steps taken to obtain the particulars or documents concerned:

6. The following documents are enclosed:
   (a) a copy of the scheme description (if any) and the development contract (if any); ☑
   (b) a copy of the by-laws of the community scheme.

7. The following additional particulars are known to the vendor or have been supplied by the community corporation: ☑

   Refer to Munro Property Group search attached

8. Further inquiries may be made to the secretary of the community corporation or the appointed community scheme manager.

   Name: Munro Property Group

   Address: 136 The Parade Norwood SA 5067

Note-

1 A community corporation must (on application by or on behalf of a current or prospective owner or other relevant person) provide the particulars and documents referred to in 3(a)-(c) and 4 and must also make available for inspection any information required to establish the current financial position of the corporation, a copy of any contract with a body corporate manager and the register of owners and lot entitlements that the corporation maintains: see sections 139 and 140 of the *Community Titles Act 1996*.

2 Copies of the scheme description, the development contract or the by-laws of the community scheme may be obtained from the community corporation or from the Lands Titles Registration Office.

3 All owners of a community lot or a development lot are bound by the by-laws of the community scheme. The by-laws regulate the rights and liabilities of owners of lots in relation to their lots and the common property and matters of common concern.

4 For a brief description of some of the matters that need to be considered before purchasing a community lot, see Division 3 of this Schedule.

Schedule-Division 3-Community lots and strata units ☑

Matters to be considered in purchasing a community lot or strata unit

The property you are buying is on strata or community title. There are **special obligations and restrictions** that go with this kind of title. Make sure you understand these. If unsure, seek legal advice before signing a contract. For example:

Governance

You will automatically become a member of the **body corporate**, which includes all owners and has the job of maintaining the common property and enforcing the rules. Decisions, such as the amount you must pay in levies, will be made by vote of the body corporate. You will need to take part in meetings if you wish to have a say. If outvoted, you will have to live with decisions that you might not agree with.

If you are buying into a mixed use development (one that includes commercial as well as residential lots), owners of some types of lots may be in a position to outvote owners of other types of lots. Make sure you fully understand your voting rights, see later.

Use of your property

You, and anyone who visits or occupies your property, will be bound by rules in the form of **articles or by-laws**. These can restrict the use of the property, for example, they can deal with keeping pets, car parking, noise, rubbish disposal, short-term letting, upkeep of buildings and so on. Make sure that you have read the articles or by-laws before you decide whether this property will suit you.

Depending on the rules, you might not be permitted to make changes to the exterior of your unit, such as installing a television aerial or an air-conditioner, building a pergola, attaching external blinds etc. without the permission of the body corporate. A meeting may be needed before permission can be granted. Permission may be refused.

Note that the articles or by-laws **could change** between now and when you become the owner: the body corporate might vote to change them. Also, if you are buying before the community plan is registered, then any by-laws you have been shown are just a draft.

Are you buying a debt?

If there are unpaid contributions owing on this property, you can be made to pay them. You are entitled to **know the financial state of the body corporate** and you should make sure you see its records before deciding whether to buy. As a prospective owner, you can write to the body corporate requiring to see the records, including minutes of meetings, details of assets and liabilities, contributions payable, outstanding or planned expenses and insurance policies. There is a fee. To make a request, write to the secretary or management committee of the body corporate.

Expenses

The body corporate can **require you to maintain your property**, even if you do not agree, or can carry out maintenance and bill you for it.

The body corporate can **require you to contribute** to the cost of upkeep of the common property, even if you do not agree. Consider what future maintenance or repairs might be needed on the property in the long term.

Guarantee

As an owner, you are a **guarantor** of the liabilities of the body corporate. If it does not pay its debts, you can be called on to do so. Make sure you know what the liabilities are before you decide to buy. Ask the body corporate for copies of the financial records.

Contracts

The body corporate can make contracts. For example, it may engage a body corporate manager to do some or all of its work. It may contract with traders for maintenance work. It might engage a caretaker to look after the property. It might make any other kind of contract to buy services or products for the body corporate. Find out **what contracts the body corporate is committed to and the cost**.

The body corporate will have to raise funds from the owners to pay the money due under these contracts. As a guarantor, you could be liable if the body corporate owes money under a contract.

Buying off the plan

If you are buying a property that has not been built yet, then you **cannot be certain** what the end product of the development process will be. If you are buying before a community plan has been deposited, then any proposed development contract, scheme description or by-laws you have been shown could change.

Buying off the plan

If you are buying a property that has not been built yet, then you **cannot be certain** what the end product of the development process will be. If you are buying before a community plan has been deposited, then any proposed development contract, scheme description or by-laws you have been shown could change.

Mixed use developments—voting rights

You may be buying into a group that is run by several different community corporations. This is common in mixed use developments, for example, where a group of apartments is combined with a hotel or a group of shops. If there is more than 1 corporation, then you should not expect that all lot owners in the group will have equal voting rights. The corporations may be structured so that, even though there are more apartments than shops in the group, the shop-owners can outvote the apartment owners on some matters. Make enquiries so that you understand how many corporations there are and what voting rights you will have.

Further information

The Real Estate Institute of South Australia provides an information service for enquiries about real estate transactions, see www.reisa.com.au.

The Australian Institute of Conveyancers (SA Division) (AICSA) provides information and operates a Public Advice Service with respect to conveyancers and the conveyancing process, see www.aicsa.com.au.

A free telephone Strata and Community Advice Service is operated by the Legal Services Commission of South Australia: call 1300 366 424.

Information and a booklet about strata and community titles is available from the Legal Services Commission of South Australia at www.lsc.sa.gov.au.

You can also seek advice from a legal practitioner.

ANNEXURES

~~* There are no documents annexed hereto~~

* The following documents are annexed hereto -

Form R3 - Buyers Information Notice

Copy of Certificate(s) of Title to the Land

The particulars supplied by the Community Corporation (statement pursuant to section 139) and enclosures
- Secondary & Primary

By-laws of the Community Scheme (12823783)

Scheme Description (12823782)

Plan of Community Division (Community Plan) (CP 41146 & CP41143)

Residential Tenancy Agreement & Lease Extension

Property Interest Report

Local Government Authority prescribed inquiry

SA Water Certificate

Emergency Services Levy Certificate

Land Tax Certificate

State Planning Commission response

Smoke Alarm Notice

ACKNOWLEDGEMENT OF RECEIPT

* I / We, the abovenamed Purchaser(s), hereby acknowledge having received this day this Statement under section 7 under the *Land and Business (Sale and Conveyancing) Act* with the annexures as set out above.

Dated this _____ Day of _____ 20____

Signature of purchaser(s)

	Signature		Signature
_____	Date	_____	Date
	Signature		Signature
_____	Date	_____	Date

*(*Strike out whichever is not applicable)*

Form R3

Land and Business (Sale and Conveyancing) Act 1994 (section 13A)
Land and Business (Sale and Conveyancing) Regulations 2025 (regulation 17)

Buyers information notice

Prescribed notice to be given to purchaser

Before you buy a home there are a number of things that you should investigate and consider. Though it may not be obvious at the time, there could be matters that may affect your enjoyment of the property, the safety of people on the property or the value of the property.

The following questions may help you to identify if a property is appropriate to purchase. In many cases the questions relate to a variety of laws and standards. These laws and standards change over time, so it is important to seek the most up to date information. Various government agencies can provide up to date and relevant information on many of these questions. To find out more, Consumer and Business Services (CBS) recommends that you check the Consumer and Business Advice section on the following website: www.cbs.sa.gov.au.

Consider having a professional building inspection done before proceeding with a purchase. A building inspection will help you answer some of the questions below.

The questions have been categorised under the headings **Safety, Enjoyment** and **Value**, but all of the issues are relevant to each heading.

Safety

- Is there **asbestos** in any of the buildings or elsewhere on the property e.g. sheds and fences?
- Does the property have any significant **defects** e.g. **cracking** or **salt damp**? Have the wet areas been waterproofed?
- Is the property in a **bushfire** prone area?
- Are the **electrical wiring, gas installation, plumbing and appliances** in good working order and in good condition? Is a **safety switch** (RCD) installed? Is it working?
- Are there any prohibited **gas appliances** in bedrooms or bathrooms?
- Are **smoke alarms** installed in the house? If so, are they hardwired? Are they in good working order and in good condition? Are they compliant?
- Is there a **swimming pool and/or spa pool** installed on the property? Are there any safety barriers or fences in place? Do they conform to current standards?
- Does the property have any **termite** or other pest infestations? Is there a current preventive termite treatment program in place? Was the property treated at some stage with persistent organochlorins (now banned) or other **toxic** termiticides?
- Has fill been used on the site? Is the soil contaminated by **chemical residues** or waste?
- Does the property use **cooling towers** or manufactured warm water systems? If so, what are the maintenance requirements?

Enjoyment

- Does the property have any **stormwater** problems?
- Is the property in a **flood prone** area? Is the property prone to coastal flooding?
- Does the property have an on-site **wastewater treatment facility** such as a septic tank installed? If so, what are the maintenance requirements? Is it compliant?
- Is a **sewer mains connection** available?
- Are all gutters, downpipes and stormwater systems in good working order and in good condition?
- Is the property near **power lines**? Are there any trees on the property near power lines? Are you considering planting any trees? Do all structures and trees maintain the required clearance from any power lines?
- Are there any **significant** trees on the property?
- Is this property a unit on **strata or community title**? What could this mean for you? Is this property on strata or community title? Do you understand the restrictions of use and the financial obligations of ownership? Will you have to pay a previous owner's debt or the cost of planned improvements?
- Is the property close to a hotel, restaurant or other venue with entertainment consent for live music? Is the property close to any industrial or commercial activity, a busy road or airport etc that may result in the generation of **noise** or the **emission of materials or odours** into the air?
- What appliances, equipment and fittings are included in the sale of the property?
- Is there sufficient car parking space available to the property?

Value

- Are there any **illegal or unapproved additions**, extensions or alterations to the buildings on the property?
- How **energy efficient** is the home, including appliances and lighting? What **energy sources** (e.g. electricity, gas) are available?
- Is the property connected to SA Water operated and maintained **mains water**? Is a mains water connection available? Does the property have a **recycled water** connection? What sort of water meter is located on the property (a **direct or indirect meter** – an indirect meter can be located some distance from the property)? Is the property connected to a water meter that is also serving another property?
- Are there water taps outside the building? Is there a watering system installed? Are they in good working order and in good condition?
- Does the property have **alternative sources** of water other than mains water supply (including **bore or rainwater**)? If so, are there any special maintenance requirements?

For more information on these matters visit www.cbs.sa.gov.au.

Disclaimer: There may be other issues relevant to the purchase of real estate. If you are unable to ascertain enough information about the questions raised in this form and any other concerns you may have, we strongly recommend you obtain independent advice through a building inspection, a lawyer, and a financial adviser.

REAL PROPERTY ACT, 1886
South Australia

The Registrar-General certifies that this Title Register Search displays the records maintained in the Register Book and other notations at the time of searching.

Certificate of Title - Volume 6200 Folio 70

Parent Title(s) CT 6199/861

Creating Dealing(s) ACT 12823781

Title Issued 17/11/2017 **Edition** 3 **Edition Issued** 05/04/2023

Estate Type

FEE SIMPLE

Registered Proprietor

DARREN SHANE KEEGAN
OF 18 NALIMBA AVENUE PARA VISTA SA 5093
1 / 2 SHARE

ANNA SEGRETO
OF 18 NALIMBA AVENUE PARA VISTA SA 5093
1 / 2 SHARE

Description of Land

LOT 23 SECONDARY COMMUNITY STRATA PLAN 41146
IN THE AREA NAMED KENT TOWN
HUNDRED OF ADELAIDE

Easements

NIL

Schedule of Dealings

Dealing Number	Description
14006087	MORTGAGE TO BENDIGO & ADELAIDE BANK LTD. (ACN: 068 049 178)

Notations

Dealings Affecting Title NIL

Priority Notices NIL

Notations on Plan

Lodgement Date	Dealing Number	Description	Status
07/11/2017	12823782	SCHEME DESCRIPTION	FILED
07/11/2017	12823783	BY-LAWS	FILED

Registrar-General's Notes

AFFECTED BY C41143

Administrative Interests NIL

Copyright: www.landservices.com.au/copyright | Privacy: www.landservices.com.au/privacy | Terms of Use: www.landservices.com.au/sailis-terms-of-use

STATEMENT PURSUANT TO SECTION 139 OF THE *COMMUNITY TITLES ACT 1996*

Date of Statement: **26 October 2026**

Community Lot in respect of which the Statement is issued:Lot **23** in **Community Plan** No**. 41146 at La Verde, 58 King William Street, KENT TOWN SA 5067**

Person requesting certificate:
Name: Bertram Form 1 Shop,
Address: Via: sonia@bertramform1shop.com

The Community corporation certifies the following with respect to the Lot being the subject of this Statement:

1. Administrative fund – contributions payable by regular periodic instalments or lump sum

Total amount last determined with respect to the lot

Amount	Period
$5,073.76	01 Jul 2026 to 30 Jun 2027

Number of instalments payable (if contributions payable by instalments) 4

Amount of each instalment, period to which instalment relates and date due

Amount	Period	Date due
$1,268.44	01 Jul 2026 to 30 Sep 2026	15 Oct 2026
$1,268.44	01 Oct 2026 to 31 Dec 2026	15 Nov 2026
$1,268.44	01 Jan 2027 to 31 Mar 2027	01 Jan 2027
$1,268.44	01 Apr 2027 to 30 Jun 2027	01 Apr 2027

Amount owing $0.00

Interest due on unpaid levies $0.00

Amount in credit for prepaid levies $0.00

2. Sinking fund – contributions payable by regular periodic instalments or lump sum (section 76(1) of the Act)

Total amount last determined with respect to the lot

Amount	Period
$10.60	01 Jul 2026 to 30 Jun 2027

Number of instalments payable (if contributions payable by instalments) 4

Amount of each instalment, period to which instalment relates and date due

Amount	Period	Date due
$2.65	01 Jul 2026 to 30 Sep 2026	15 Oct 2026
$2.65	01 Oct 2026 to 31 Dec 2026	15 Nov 2026
$2.65	01 Jan 2027 to 31 Mar 2027	01 Jan 2027
$2.65	01 Apr 2027 to 30 Jun 2027	01 Apr 2027

Amount owing $0.00

Interest due on unpaid levies $0.00

Amount in credit for prepaid levies $0.00

3. Special contributions

None

4. Particulars of Assets and Liabilities of the Corporation

A copy of the Balance Sheet at the date of this Statement is attached.

5. Particulars of any Expenditure

(a) Incurred by the Corporation

As per the Minutes provided.

(b) Resolved to be incurred to which the unit holder must, or is likely to be required to, contribute

As per the Minutes provided.

6. Insurance policies

Particulars of all insurance policies that the community corporation has taken out.

Policy No. HU0038241 CHU Underwriting Agencies Pty Ltd
Type: Building Broker:

Premium: $77,197.14 Paid on: 14/04/2026 Policy start date: 15/04/2026 Next due: 15/05/2027

Cover	*Sum insured*	*Excess*	*Notes*
Sum Insured	$36,915,000.00	$2,000.00	
Loss of Rent/Temp Accom(15%)	$5,537,250.00		
Common Area Contents	$262,500.00		
Public Liability	$20,000,000.00		
Voluntary Workers	$300,000/$3,000		
Fidelity Guarantee	$250,000.00		
Office Bearers Legal Liability	$5,000,000.00		
Machinery Breakdown (Over 5Kw)	$100,000.00	$500.00	
Catastrophe	$11,074,500.00		
Government Audit Costs	$25,000.00		
Appeal Expenses	$100,000.00		
Legal Defence Expenses	$50,000.00		
Lot Fixtures & Improv.(P/L)	$250,000.00		
Flood	Included		
Extended cover - Rent/Temp Accommodation	$1,661,175.00		
Escalation in Cost of Temp Accommodation	$553,725.00		
Cost of Storage and Evacuation	$553,725.00		

Commission $0.00

7. Documents Supplied

(i) Minutes of general meetings of the corporation and meetings of the management committee for the last two years
(ii) Statement of Accounts of the corporation last prepared by the corporation
(iii) The current policies of insurance taken out by the corporation

The information provided is accurate as at the date of this Statement and is not intended to be relied upon by any party other than the person who requested this Statement under Section 139 of the Act.

NOTE:

An inspection of the accounting records, minute books of the corporation and any other prescribed documentary material may be arranged by application to the Agent at the address listed below:

This Statement was prepared on behalf of Community Corporation No. 41146 Inc. by



Jason Nash
Munro Property Group
136 The Parade
NORWOOD SA 5067

MUNRO™ Property Group Pty Ltd
ABN 41 007 878 079

t 08 8132 2000

Level 1, Suite 3, 136 The Parade
Norwood SA 5067
corporations@munroproperty.com.au
munroproperty.com.au

MINUTES OF THE INQUORATE ANNUAL GENERAL MEETING OF COMMUNITY PLAN 41146

Meeting In accordance with the Community Titles Act 1996

La Verde
58 King William Street, KENT TOWN, SA, 5067

In accordance with the *Community Titles Act 1996 Section 81 (1)* the Officers of the Corporation called the Annual General Meeting.

DATE: **9 September 2026**
TIME: **06:00 PM**
LOCATION: **https://msteams.link/JGY2**

Attendance

Lot 4	Lynda Kay	Electronic vote
Lot 7	Ms Ria D H Martens	Owner present
Lot 8	R Darling	Owner present
Lot 11	T McLoughlin	Electronic vote
Lot 13	Angela Jane Ruddenklau	Electronic vote
Lot 18	Derek T S & Patrina S Lee	Electronic vote
Lot 21	Gong Zhang	Electronic vote
Lot 25	F A Falco	Owner present
Lot 29	Bruce Desmond Hines & Judith Anne Hines	Electronic vote
Lot 33	Lutz Quinquis Super Nominees Pty Ltd	Electronic vote
Lot 40	Thomas A Britten-Jones	Electronic vote
Lot 44	Grant E & Alexandra A Piggott	Owner present
Lot 45	Malcolm Leslie Germein & Helen Joyce Germein	Owner present
Lot 46	J Norcock Pty Ltd	Electronic vote
Lot 47	Geraldine Lim & Calvin Puah	Electronic vote

Others in attendance
Jason Nash on behalf of Munro.

Apologies
Nil

Proxy Voting

In accordance with *The Community Titles Act 1993 Section 84(3)*, proxies were tabled and subsequently the absentee votes on the proposed agenda have also been tabled as per the *Community Titles Act 1993 Section 84 (11)*

Lot 12	Rose-Anne Frances Zappia & Elisabeth De Bono ATF Ed & RFZ Family Trust	Proxy Name: Grant E & Alexandra A Piggott
Lot 30	Justine Mui-Chin Toh	Proxy Name: Stanley Toh

Quorum

In accordance with *The Community Titles Act 1996 Section 83(4)*, a quorum is determined by dividing the number of persons entitled to attend and vote (financial members) at the meeting by two, disregarding any fraction and adding one. At the time of the meeting, a quorum was not achieved with only 17 financial members present, therefore a new time and date were elected, and the meeting was adjourned.

MINUTES OF THE RECONVENED ANNUAL GENERAL MEETING OF COMMUNITY PLAN 41146

Meeting In accordance with the Community Titles Act 1996

La Verde
58 King William Street, KENT TOWN, SA, 5067

In accordance with the *Community Titles Act 1996 Section 81 (1)* the Officers of the Corporation called the Annual General Meeting.

DATE:	**23 September 2026**
TIME:	**06:00 PM**
LOCATION:	**Apt.45,58 King William Street, KENT TOWN, SA, 5067** **https://msteams.link/JGY2**

Attendance

Lot 4	Lynda Kay	Electronic vote
Lot 7	Ms Ria D H Martens	Owner present
Lot 8	R Darling	Owner present
Lot 11	T McLoughlin	Electronic vote
Lot 13	Angela Jane Ruddenklau	Electronic vote
Lot 18	Derek T S & Patrina S Lee	Electronic vote
Lot 21	Gong Zhang	Owner present (pre-voted)
Lot 25	F A Falco	Owner present
Lot 26	Eve Sullivan	Owner present
Lot 28	Luke P & Vanessa M Giles	Electronic vote
Lot 29	Bruce Desmond Hines & Judith Anne Hines	Electronic vote
Lot 33	Lutz Quinquis Super Nominees Pty Ltd	Electronic vote
Lot 40	Thomas A Britten-Jones	Electronic vote
Lot 42	K Keough	Owner present (pre-voted)
Lot 44	Grant E & Alexandra A Piggott	Owner present
Lot 45	Malcolm Leslie Germein & Helen Joyce Germein	Owner present
Lot 46	J Norcock Pty Ltd	Electronic vote
Lot 47	Geraldine Lim & Calvin Puah	Electronic vote

Others in attendance
Jason Nash on behalf of Munro.

Apologies
Nil

Proxy Voting

In accordance with *The Community Titles Act 1993 Section 84(3)*, proxies were tabled and subsequently the absentee votes on the proposed agenda have also been tabled as per the *Community Titles Act 1993 Section 84 (11)*

Lot 12	Rose-Anne Frances Zappia & Elisabeth De Bono ATF Ed & RFZ Family Trust	Proxy Name: Grant Piggott
Lot 30	Justine Mui-Chin Toh	Proxy Name: Proxy to Stanley Toh

Quorum
A quorum was declared as per The Community Titles Act 1996, Section 83(5(c)), "if a quorum is not formed at the reconvened meeting within half an hour, the persons present and entitled to vote constitute a quorum". The meeting opened at 06:30 PM.

Motions Resolved at the Reconvened Meeting (23 Sep 2026)

MEETING OPENING, APPOINTMENT OF MEETING CHAIRPERSON & MINUTE SECRETARY

Resolved that Jason Nash of Munro would assist the Presiding Officer by conducting the meeting; and assist the Secretary in the recording of minutes as per the *Community Titles Act 1996 Section 83(3a).*

Motion CARRIED.

Yes: 19	No: 0	Abstain: 1	Inv: 0

DECLARATION OF INTEREST

In accordance with the *Community Titles Act 1996 Section 85*, it is a legal requirement for members to make known to the meeting any direct or indirect financial interest in matters to be voted upon at a properly convened meeting.

CONFIRMATION OF PREVIOUS MINUTES

Resolved, in accordance with the *Community Titles Act 1996 Section 81(5a),* that the minutes of the last Annual General Meeting held on the 16th of January 2025 be confirmed as a true record of the proceedings of that meeting.

Motion CARRIED.

Yes: 15	No: 0	Abstain: 5	Inv: 0

ACCEPTANCE OF FINANCIAL STATEMENTS

Resolved, in accordance with the *Community Titles Act 1996 Section 81(5(d))* and the *Community Titles Regulations 2011 Section 16,* that the full financial statements year ending 30th of June 2026 having been circulated, tabled and discussed be accepted as a true and accurate record of the Corporation's financial standings.

Motion CARRIED.

Yes: 18	No: 0	Abstain: 2	Inv: 0

ELECTION OF OFFICE BEARERS

Resolved in accordance with the *Community Titles Act 1996 Section 76*, that the Corporation fill the following positions as per successful nomination at the meeting:

Presiding Officer - Grant Piggott
Secretary - Rose-Anne Zappia
Treasurer - Tony Zhang

As per the *Community Titles Act 1996 Section 92*, If a vacancy arises in any of the positions, the position will need to be filled at a General Meeting, or, if the corporation has a management committee, the committee may, by ordinary resolution, appoint a lot owner to fill the vacancy.

Motion CARRIED.

Yes: 18	No: 1	Abstain: 1	Inv: 0

APPOINTMENT OF MANAGEMENT COMMITTEE

Resolved the appointment of a management committee comprised of the office bearers, along with Frank Falco, Eve Sullivan, Ria Martens and Malcolm Germein; and that the management committee be authorised to give consent for each occurrence of unplanned maintenance work that may occur throughout the year.

The *Community Titles Act 1996 Section 92(2)* states that: Subject to this Act and to any limitations imposed by the Corporation or by the bylaws of the community scheme, a management committee has full power to transact any business of the corporation.

Munro recommends the appointment of a management committee to ensure that the management consultant has the required directives from the representatives to carry out its business as it sees fit.

The management committee has the authority to approve quotes, some minor additions, alterations, and approvals, however may (at its discretion) call a General Meeting to consult with all owners on any matter.

Owners are reminded that the management committee does not have the power to authorise anything for which a special or unanimous resolution of the Corporation is required by the Act or the bylaws.

Munro advises that additional fees may apply if a representative is invited to attend committee meetings, assisting with chairing, and recording the minutes.

Should a management consultant not be required, it is the responsibility of the Secretary to ensure that detailed minutes are taken and provided to Munro to hold on file and carry out any requests in accordance with the contract of appointment.

Motion CARRIED.

Yes: 18 No: 1 Abstain: 1 Inv: 0

APPOINTMENT OF BODY CORPORATE MANAGER

Resolved that Munro is to be appointed as manager of the Corporation in accordance with the *Community Titles Act 1996 Section 76(9)* and to assist the appointed officer bearers via delegation for the following 12 months; and that the Presiding Officer be authorised to sign the management agreement.

SERVICES COVERED BY ANNUAL MANAGEMENT FEE

See Management Contract of Appointment

The Manager has the functions and duties provided for under the Act including:

Accounting.

- Establish and operate a bank account in the name of the Corporation or a trust account for the Corporation;
- Keep books of account covering all income and expenditure and assets and liabilities of the Corporation;
- Prepare annual financial statements of all income and expenditure and assets and liabilities of the Corporation (the annual accounts);
- Issue notices for fees set and special fees levied by the Corporation;
- Pay invoices on behalf of the Corporation (provided reasonable funds are held by the Corporation);
- Reconciliation of account.

Insurance

- Arrange insurance or renewal only with or through the authorising licensees listed in Clause 1.2 in accordance with the authority(ies) to provide insurance services listed in Clause 1.2, unless the Manager or the Manager's employer holds its own Australian Financial Services Licence covering the provision of the services;
- Arrange a valuation of the cost of reinstatement and replacement of the building/s when requested by the Corporation;
- Prepare and lodge routine insurance claims with insurers/brokers (max. 15 minutes);
- Provide any other insurance services in respect of insurance products offered through the authorising licensees as listed in Clause 1.2, or as otherwise authorised by the Australian Financial Services Licence held by the Manager, or the Manager's employer.

Documentation

- Maintain register of owners' names and addresses;
- Issue all Corporation search certificates and answer reasonable enquiries at the relevant cost of the applicant/enquirer;
- Deal with routine inwards and outward correspondence;
- Keep and supervise the use of the common seal;
- Keep the records of the Owners Corporation including minutes and ballots.

Annual General Meeting

- Convene, submit a budget and financial statement to and record minutes of the Annual General Meeting;
- Attendance at Annual General Meeting may be charged as Additional Services as set out in 2.2;

- Any meeting held outside the Manager's office may attract a fee for travel time as set out in 2.2.

Maintenance

- Arrange for minor (< $1,000 or 15 minutes) repairs and maintenance of Corporation's common property.

Guidance

- Provide guidance to the Corporation to enable the Corporation to carry out and perform its duties and functions, as set out in this clause.

General

- Generally, implement the decisions and instructions of the Corporation with respect to its duties and functions as set out in this contract.

If additional services in Clauses 2.2 and 2.3, and the Special Conditions as stated in the management contract of appointment are provided, they will be charged to the Corporation where applicable. These charges may include government charges, registering as public officer, disbursements, data storage, audit charges and tax document preparation if necessary. These charges will be debited to the Corporation as actually expended.

Motion CARRIED.

Yes: 18 No: 1 Abstain: 1 Inv: 0

INSURANCE

Insurance Details

As per the *Community Titles Act 1996 Section 103(1a) & (2(b,c))* the Corporation must insure the buildings and other improvements (if any) on the common property for the full cost of replacement with new materials. As per Section 104 of the *Community Titles Act 1996*, the Corporation must also hold fidelity guarantee cover and public liability cover, in addition to any other insurance required by the Act, its regulations or the Corporation bylaws.

The insurance policy is enacted by the primary, Community Corporation No. 41143 Inc.

In accordance with the *Community Titles Act 1996 Section 81(5, d, iiib)* and the *Community Titles Regulations 2011 Regulation 16*, the current insurance details for the Corporation are included in the table below.

Policy Number	Underwriter	Current To	Risk Type	Coverage Amount
HU0038241	CHU Underwriting Agencies Pty Ltd	15 May 2027	Sum Insured	$36,915,000.00
			Loss of Rent/Temp Accom(15%)	$5,537,250.00
			Common Area Contents	$262,500.00
			Public Liability	$20,000,000.00
			Voluntary Workers	$300,000.00 / $3,000.00
			Fidelity Guarantee	$250,000.00
			Office Bearers Legal Liability	$5,000,000.00
			Machinery Breakdown (Over 5Kw)	$100,000.00

			Catastrophe	$11,074,500.00
			Government Audit Costs	$25,000.00
			Appeal Expenses	$100,000.00
			Legal Defence Expenses	$50,000.00
			Lot Fixtures & Improv.(P/L)	$250,000.00
			Flood	Included
			Extended cover - Rent/Temp Accommodation	$1,661,175.00
			Escalation in Cost of Temp Accommodation	$553,725.00
			Cost of Storage and Evacuation	$553,725.00
TOTAL PREMIUM: $77,197.14				

Munro is qualified to give general advice and information about insurance, not personal advice. If the Corporation requires specialist insurance advice, Munro can refer the Corporation to an insurance advisor. Munro advised the members that they are not qualified to advise on a replacement value and if guidance is required, the advice of a licensed valuer should be obtained. Munro recommends that the Corporation consider undertaking a valuation every 3-5 years to accommodate for market fluctuations, major catastrophe, and legislation changes.

Munro will not be held responsible for the decision of the Corporation relating to the sum insured and will be indemnified by the Corporation in the event a claim is not met in full due to the Corporation being under or uninsured.

Valuation

In accordance with the *Community Titles Act 1996 Section 103(2)*, the Corporation must consider the value of the sum insured to include a total rebuild of the common property. It is stated in the *Community Titles Act 1996 Section 103(3)* that any shortfall resulting in the under insurance must be met by the Corporation members.

Munro advises members that they are not qualified to advise on a replacement value for insurance purposes owners are to be mindful that in case of a major event, council legislative requirements may have changed over the years thus incurring additional costs when rebuilding and if the members are unsure as to what the policy should be renewed for, they should obtain the advice of a valuer.

It is noted that the Corporation's last valuation was completed on 07 Mar 2024 by Acumentis (SA) Pty Ltd with the recommended replacement sum being $36,915,000.00.

Determination of Sums Insured

Resolved that the Corporation requests the primary to confirm, vary or extend the sums insured by a majority vote on the following options.

Motion CARRIED.

Yes: 17 No: 0 Abstain: 3 Inv: 0

Alternatives for Determination of Sums Insured

(Option A) To resolve that the Corporation increase the building sum insured by CPI or 5% (whichever is greater) upon renewal.

(Option B) To resolve that the members consider the current sums insured adequate to cover full replacement value and extend the policy to keep the same upon renewal as per the obligations under the *Community Titles Act 1996*.

(Option C) To resolve that Munro arranges an insurance valuation to be carried out for the Corporation, and that the sums insured amount be set as per the recommended replacement value.

'OPTION C' has been selected with the highest votes.

A: 4	B: 3	C: 13	Inv: 0

Authorised Representatives / Distributors

Munro Property is an Authorised Representative of Corporate Home Unit Underwriting Agencies Pty. Ltd and an Authorised Distributor of Strata Community Insurance Pty Ltd.

Placement of Insurance

Resolved that the Corporation requests the primary extends the renewal date to coincide with the Annual General Meeting,

Should no clear instructions be received, in order to remain compliant with legislation and to ensure that the common property remains insured at all times, Munro is authorised to automatically renew the Corporation insurance policy before maturity each year at the limits of cover held by the Corporation.

Motion CARRIED.

Yes: 18	No: 0	Abstain: 2	Inv: 0

General Information

Landlords / Contents Insurance

Munro advises all owners that the Corporation's insurance does not cover the landlord or contents insurance. Each owner is responsible for ensuring that they have cover in place which suits their individual needs. The Corporation's policy also does not include public liability cover for individual units.

Insurance Claims

Owners are advised that any successful claim will attract an excess and will likely affect the premium upon renewal. If a claim is made because of lack of maintenance by the Corporation, the Corporation will be responsible for paying the excess. The owner will generally be responsible for the payment of the excess in all other instances.

Owners are advised that claims made against the Corporation's insurance policy associated with lack of maintenance or naturally occurring deterioration (wear and tear) may be refused by the insurer. The Corporation should ensure that regular repairs and maintenance should be planned and carried out to prevent damage to the common property.

Claims also associated with non-rectification of an insured property defect, error, or omission that you were aware of or should reasonably have been made aware of may also be refused by the insurer.

Owners are further advised that when making a claim against malicious damage, theft, arson etc. a Police Incident Report (PIR) number will be required by the insurer and the report should be made as soon as the insured is aware of the loss.

If owners are unsure as to what is required when making a claim, they are to refer to the insurer's Product Disclosure Statement (PDS).

ALTERATIONS, ADDITIONS & APPROVALS

As of the agenda issuance, no applications have been submitted for consideration.

Owners are advised that Corporation approval may be required for certain things including (but not limited to) prescribed works, pets, and exclusive use of common property. Some approvals require the passing of a special or unanimous resolution and cannot be considered unless the exact wording of the proposal is included in the agenda.

"Prescribed work" in relation to a unit means:
(a) the erection, alteration, demolition or removal of a building;
(b) the alteration of the external appearance of a building.

If owners are unsure if Corporation approval is required, they are to contact Munro for further clarification.

COMMON PROPERTY MAINTENANCE
Lift Maintenance / Costs (Standing Arrangement)

It is noted that the Corporation has a contract with Schindler Lifts (exp. 14 December 2028) for the maintenance of the lifts. It is further noted that Community Corporation No. 41145 Inc. ("SOHO"), and lots 1, 2 & 3 of Community Corporation No. 41144 Inc. (commercial premises) are exempt from contributing to these costs in accordance with bylaw 43, and the resolution passed at the 2023 Annual General Meeting. $9,306.24 ex. GST has been included in the proposed budget for CC 41146's portion.

Common Property Maintenance

Caretaking & Cleaning
It was noted that the cleaning and caretaking was carried out by CBR. Owners were happy to continue with the service, however the manager was asked to ensure that the common stairwells were also being attended to on a regular basis, and also to enquire about whether the plants in the lobby could be looked after more regularly by the cleaners. If plant maintenance is outside the cleaners' scope of work, the corporation may consider engaging another company to maintain those plants.

Waste Management

The manager advised that NPSP council had approved the corporation's waste management plan and were in the process of including the building in the regular council run. This had been dragging on for some time however, and it was expected that it would've been on the council run in the second half of this year. The manager will chase council up for further updates.

Carpark

It was noted that the owners of Pan & Vine had been steadily increasing the number of items being left out in the carpark, making it quite unsightly in that area. The manager will contact the owners and advise that all of the items must be removed. Fines will be applied for non-compliance.

Gates - Driveway & Pedestrian

It was noted that the pedestrian gate on the north eastern corner was currently still awaiting repair. The manager advised that it appears to be an electrical fault with the cabling leading toward to the strike and will require further testing.

Atrium Repairs

The manager advised that the atrium repairs and repainting had been completed following the removal of the ivy. There was still an issue however with areas of the cracked and missing grouting on the edges of the walkways, which was going to be repaired at the same time as the repainting. The manager advised that closer examination of the area had revealed a larger problem with the penetrations around the walkway posts not being sealed and allowing water into the sub-tile level. This will need to be repaired to ensure such cracking doesn't happen again. The manager was asked to engage an engineer to investigate the issue and report as to whether this a building defect that can be taken back to the builders to rectify.

Door Closers

It was noted that several owners had recently had their entrance door closers replaced by Access Hardware after the existing ones had failed. The manager will noted the model of the new ones as they seem to be better than the originally installed ones.

Bike Storage

The manager advised that the bike storage area near the front entrance is now available for all residents. The apartment keys will open the door. Residents store their bikes at their own risk.

Stairwell and Lift Security

The manager will investigate options to ensure that the stairwells and lifts cannot be accessed from the carpark without either key or fob entry.

In the event of a property emergency, Munro is to be contacted in the first instance on 08 8132 2000. In the event of after-hours emergencies, the call will be directed to HPG Insurance & Maintenance Works. Please note that this service is above and beyond the standard service provided and will incur additional charges at an hourly rate.

If the works are not deemed an emergency or are determined to be the responsibility of the owner, costs will be passed to the owner for recovery.

General Information - EV Chargers

After discussion, it was agreed that the installation of EV chargers be put on the backburner for now due to limited interest and the high cost of upgrading the building power supply.

Member Register

To ensure you receive all communications from the corporation, please provide Munro Property with a valid email address and notify them promptly of any changes to your contact information.

The members register is a confidential document and distribution of this register must comply with the *Privacy Act 1988*. Requests for access to other members' details should be directed in writing to the secretary of the Corporation. If you prefer not to have your details circulated to other owners, please inform Munro Property in writing.

Owners are reminded that correspondence and financial records are available for inspection by appointment during regular business hours at the offices of Munro Property.

BUDGET & CONTRIBUTIONS

Review & Acceptance of Administration Fund

Resolved, in accordance with the *Community Titles Act 1996 Section 116,* that the proposed administration budget and consequently the annual contributions being $213,000 + GST be accepted.

Administration funds are collected to pay recurrent expenditure of the Corporation such as the insurance premium.

Motion CARRIED.

Yes: 15	No: 0	Abstain: 5	Inv: 0

Review & Acceptance of Sinking Fund

Resolved, in accordance with the *Community Titles Act 1996 Section 116,* that the proposed sinking fund budget and consequently the annual contributions being $470.00 + GST be accepted.

A community corporation requires a sinking fund under the *Community Titles Act 1996 Section 116 (3)*. Non-recurrent expenditure must be made from the sinking fund and all other recurrent expenditure of the corporation must be made from the administrative fund.

The sinking fund's purpose is not to offset recurrent expenditure of the Corporation (unless instructed so by the elected representatives) and is additional to the above administration budget.

Motion CARRIED.

Yes: 17	No: 0	Abstain: 3	Inv: 0

Contributions

Both contributions are to be divided by lot entitlement and paid in quarterly instalments.

Forward Budget

A 15-year forward sinking fund forecast was prepared by Acumentis in 2024. This report is used to inform sinking fund requirements. A copy of the report is available on the Munro online portal or by contacting the Munro office.

In accordance with the *Community Titles Act 1996 Section 113(1aa)* and the *Community Titles Regulations 2001 Regulation 18A*, corporations that are 7-20 lots, with improvements (including buildings or other structures) on the common property insured for $100,000 or more, a 3-year forward budget must be presented at each Annual General Meeting. This budget must include any proposed expenditure (other than ongoing costs) for a 3-year period.

Corporations that are 20+ lots, with improvements (including buildings or other structures) on the common property insured for $100,000 or more, must present a 5-year forward budget at each Annual General Meeting. This budget must include any proposed expenditure (other than ongoing costs) for a 5-year period.

Corporations with less than 7 lots or a common property insurance value of less than $100,000 are exempt from providing a forward budget.
Munro recommends the Corporation utilise the services of qualified asset surveyors to provide this report should one be required.

Motion CARRIED.

Yes: 15	No: 0	Abstain: 5	Inv: 0

UNPAID LEVIES POLICY
Approval of Debt Recovery Process for Arrears

Resolved as per the *Community Titles Act 1996 Section 114(8),* which provides that "a contribution, instalment or interest may be recovered as a debt", the Corporation hereby adopts (or reaffirms, where previously adopted) the following debt recovery policy:

- For levies unpaid 14 days after their due date, owner/s will receive a reminder letter and a text message (stage 1).
- For levies unpaid 60 days after their due date and greater than $50.00, the owner/s will receive a final notice outlining the cost associated with transferring the recovery to a lawyer and a text message (stage 2, cost $55.00).
- For levies unpaid 90 days after their due date and greater than $500.00, the owner/s will receive a notice outlining that the recovery of overdue levies will be transferred to a solicitors' office specialising in debt recovery (stage 3, cost $150.00).

Munro is to be contacted if an owner is having difficulty paying on time, so fees are minimised or negotiated, interest charged may be waived if an adequate payment plan is maintained and adhered to.

Motion CARRIED.

Yes: 17	No: 1	Abstain: 2	Inv: 0

Approval of Recovery of Debt Collection Fees

Defeated unanimously that all fees incurred by the Corporation associated with the debt recovery process (including, but not limited to, solicitors' fees and court costs) will be payable by the owner, recovered by the action and applied to the lot owner's account.

As per the *Community Titles Act 1996*, a unanimous resolution cannot pass if any votes are cast against it. Members are advised that should the motion be defeated, it may hinder the Corporation's ability to recoup fees associated with debt recovery.

Should the motion carry, all costs initially will need to be met by the Corporation but will be recovered by the action and applied to the lot owner's account.

Motion DEFEATED.

Yes: 17	No: 1	Abstain: 2	Inv: 0

Interest Charged on Overdue Accounts

Resolved that the Corporation resolve to adopt, or (where previously adopted) reaffirm, an interest rate of 15% per annum to be applied to contributions in arrears, in accordance with the Act.

As per the *Community Titles Act 1996 Section 14(b),* the Corporation may "fix (in accordance with the regulations) interest payable in respect of a contribution, or an instalment of a contribution, that is in arrears."

Motion CARRIED.

Yes: 17	No: 2	Abstain: 1	Inv: 0

APPOINTMENT OF PUBLIC OFFICER

Resolved that Mr Joshua Baldwin of Munro act as Public Officer as defined under the *Income Tax Assessment Act 1936*.

Under the *Income Tax Assessment Act 1936,* a person is required to be nominated to act as public officer for the Corporation. An owner can fill this position however this can present issues should ownership of the lot change at any time.

Motion CARRIED.

Yes: 18	No: 1	Abstain: 1	Inv: 0

ENGAGEMENT OF AUDITOR

Resolved as per the *Community Titles Act 1996 Section 138* that NRM Johnson be engaged to audit the annual statement of accounts.

NRM Johnson is a registered company auditor within the meaning of the *Corporations Act 2001* of the Commonwealth.

Motion CARRIED.

Yes: 17	No: 0	Abstain: 3	Inv: 0

General Business | Any Other Business

To discuss any items that have not otherwise been raised.

NEXT MEETING DATE & MEETING CLOSURE

The next AGM will be held in mid-late August 2027. Details will be confirmed closer to the time.

Meeting Close

The meeting closed at 07:29 PM.

Approved Budget
to apply from 01/07/2026

Community Corporation No. 41146 Inc. — La Verde, 58 King William Street, KENT TOWN SA 5067

Administrative Fund

	Approved budget
Revenue	
Levies Due--Admin	225,000.00
Recovery--Owner	3,000.00
Total revenue	228,000.00
Less expenses	
Admin - Special Levy Contribution - Primary	23,355.00
Admin--Accounting--Tax Return	268.10
Admin--Auditors--Audit Services	755.00
Admin--Bank Charges--Account Fees	25.00
Admin--Consultant--BAS Prep. & Lodgement	600.00
Admin--Consultant--Meeting Fee	250.00
Admin--Consultant--Public Officer Fee	109.90
Admin--Levy Contribution--Primary Admin	179,055.00
Admin--Levy Contribution--Primary Sinking	27,323.02
Maint Bldg--Cleaning	1,000.00
Maint Bldg--Lift	18,600.00
Maint Bldg--Rubbish Chute	500.00
Services--Meter Reading	2,700.00
Total expenses	254,541.02
Surplus/Deficit	(26,541.02)
Opening balance	38,190.97
Closing balance	$11,649.95
Total units of entitlement	10000
Levy contribution per unit entitlement	$24.75
Budgeted standard levy revenue	225,000.00
Add GST	22,500.00
Amount to raise in levies including GST	$247,500.00

Sinking Fund

	Approved budget
Revenue	
Levies Due--Sinking	470.00
Total revenue	470.00
Surplus/Deficit	470.00
Opening balance	36,836.83
Closing balance	$37,306.83
Total units of entitlement	10000
Levy contribution per unit entitlement	$0.05
Budgeted standard levy revenue	470.00
Add GST	47.00
Amount to raise in levies including GST	$517.00

Adelaide Office
136 The Parade
Norwood
South Australia 5067

08 8132 2020
info@munroproperty.com.au

Munro Property Group Pty Ltd
ABN 41 007 878 079

www.munroproperty.com.au

Insurance RENEWED – Disclosure Advice

Tuesday, April 14, 2026

This document has been prepared in line with the Strata Community Association (SCA) Best Practice Guide on disclosure 2024

The insurance renewal for your corporation was PAID on: **14/04/2026**

Attached is:

- Insurance renewal certificate
- The SCA Best Practice Insurance Guide – Consumer Fact Sheet

Original Disclosure Date: **14/04/2026**

Special Notes	
Renewal Date Adjustment	NO
Endorsements	NO

Valuation	Date: 20/03/24	Amount: $36,915,000	Valuer: Acumentis

In accordance with the recommendations set forth by the Strata Community Association Australia, we are required to provide all our clients with an Insurance Disclosure Form. This form is designed to give you comprehensive information about your current insurance policies, including coverage details, premiums, and commissions paid.

Munro Property Group have always declared in our minutes and management agreements that we receive commissions from insurers who we deal directly with. The invoices for these insurance policies also have had, for a number of years, the amount of commission earned on the policies.

What You Need to Do:

1. **Review the Form:** Please take a moment to carefully review the attached Insurance Disclosure Form.
2. **Contact Us with Questions:** If you have any questions or require further clarification regarding the information provided, or refer to the attached Frequently Asked Questions page supplies by the SCA.

INSURANCE RENEWED DISCLOSURE

Name: Community Corporation 41143 Inc **Policy No: HU0038241**

Period of Insurance: 15/04/2026 to 15/04/2027

	Previous Premium	**Renewed Premium**
Building Sum Insured	$36,915,000.00	$36,915,000.00
Insurer	CHU Underwriting Agencies Pty Ltd	CHU Underwriting Agencies Pty Ltd
Total Premium	$67,979.49	$77,197.14

	Previous Premium	**Renewed Premium**
Insurance Provider	CHU	CHU
Product Disclosure & Financial Services Link (s)	https://chucom.au	https://chu.com.au
1. Base Premium (includes commission)	$55,540.13	$63,044.33
2. Government Emergency Service Levy	Nil.	Nil.
3. Stamp Duty	$6,720.35	$7,628.37
4. Underwriting Agency Fee	$150.00	$200.00
5. Broker Fee	$0.00	$0.00
6. GST	$5,569.01	$6,324.44
Total insurance costs including GST	**$67,979.49**	**$77,197.14**
7. Commission	$11,108.04	$12,608.87
8. Allocation of Remuneration excluding GST		
Munro Property share of remuneration	100%	100%
Broker share of remuneration	N/A	N/A
Please list in detail here any other forms of remuneration related to this transaction.	**NONE**	
Please detail here any conflicts of interest that exist in the placement of this insurance and how they are managed.	**NONE TO REPORT**	
We, **Munro Property Group** are acting in the best interests of the client in the presentation of this quotation. Signature: Name: **Jason Nash** For and on behalf of Munro Property.		
Total Strata Insurance Remuneration	**$67,979.49**	**$77,197.14**

PREPARED BY MUNRO PROPERTY GROUP PTY LTD

Commercial Property
Sales & Marketing
Leasing
Management

Residential Property
Sales & Marketing
Leasing
Management

Body Corporate
Management
Consulting

Property Trust
Acquisitions
Administration

Property Development
Strategic Planning
Feasibilities
Project Marketing
Joint Ventures

Level 13, 431 King William Street
Adelaide SA 5000

Renewal Schedule

CHU Residential Strata Insurance Plan

Policy Number	**HU**0038241
Policy Wording	CHU RESIDENTIAL STRATA INSURANCE PLAN
The Insured	COMMUNITY CORPORATION NO. 41143. 41144, 41145 & 41146 INC.
Situation	54-60 KING WILLIAM STREET KENT TOWN SA 5067
Policy Period	15/04/2026 to 15/04/2027 at 4:00pm

Sections

Section 1 – Insured Property

Building: $36,915,000
Common Area Contents: $262,500
Loss of Rent & Temporary Accommodation (total payable): $5,537,250
Lot Owners' Fixtures and Improvements (per lot): $250,000

Optional Extensions:
Catastrophe Insurance Sum Insured: $11,074,500
- Extended Cover - Loss of Rent & Temporary Accommodation: $1,661,175
- Escalation in Cost of Temporary Accommodation: $553,725
- Cost of Removal, Storage and Evacuation: $553,725

Machinery Breakdown: $100,000
Lot Owners' Contents inclusion (per lot): Not Selected

Section 2 – Liability to Others

Sum Insured: $20,000,000

Section 3 – Voluntary Workers

Death: $300,000
Total Disablement: $3,000 per week

Section 4 – Fidelity Guarantee

Sum Insured: $250,000

Section 5 – Office Bearers' Legal Liability

Sum Insured: $5,000,000

Section 6 – Government Audit Costs and Legal Expenses

Government Audit Costs: $25,000
Appeal expenses – common property health & safety breaches: $100,000
Legal Defence Expenses: $50,000

Flood Cover is included.

The contract of insurance is arranged by CHU Underwriting Agencies Pty Ltd (ABN 18 001 580 070, AFSL 243261) on behalf of the insurer: QBE Insurance (Australia) Limited (ABN 78 003 191 035, AFSL 239545).

Excesses

Section 1 – Insured Property
Standard: $2,000

Optional Extensions – Excesses
Machinery Breakdown
Standard: $500

Section 2 – Liability to Others

Other excesses payable are shown in the Policy Wording.

Premium

Base Premium	$63,044.33
Levies	$0.00
GST	$6,324.44
Stamp Duty	$7,628.37
Admin Fee	$200.00
Total Payable	**$77,197.14**

MUNRO PROPERTY GROUP BODY CORPORATE

Commission	$12,608.87
Commission GST	$1,260.88

Date of Issue 14/04/2026

Refer to **Important Information** below for excess descriptions and confirmation of cover. Please refer to your Product Disclosure Statement and Policy Wording QM562-0725 for further terms and conditions that apply.

Important Information

Confirmation of cover

The cover provided by this schedule forms part of your contract of insurance and is in force for the Period of Insurance shown. Cover is subject to the policy terms, conditions, limitations and exclusions. Please refer to your policy document and PDS.

Your duty when you renew your policy

This document sets out the information we hold about you, your property and your policy.

By law, you must take reasonable care not to make a misrepresentation. This means before renewal, you must review this information and tell us if anything is wrong or if there have been any changes. Some types of changes may impact our offer of renewal terms.

If we do not hear from you and you renew your policy, this means you agree that the information you have previously provided to us is correct and that nothing has changed.

If you do not tell us about anything that has changed, or if any of the information is misleading, incomplete, inaccurate or fraudulent we may reduce or not pay a claim, cancel your policy or treat it as if it never existed.

If anything is unclear, please contact us.

Excesses – explanatory notes

Whenever an Excess and amount is shown in the Schedule or Policy Wording, You must pay or contribute the stated amount for each claim You make against the Insured Event.

Water Damage Excess

The following Excess will apply to Section 1 – Insured Property for loss or damage caused by:

a. Damage from bursting, leaking, discharging or overflowing of tanks, apparatus or pipes
b. Rainwater

The additional Excess payable will be shown on Your Policy Schedule.

Other excesses apply. These are listed on your Policy Schedule or described in the Policy Wording.

Best Practice – Strata Insurance Disclosure

Consumer Fact Sheet

What is Best Practice for strata insurance disclosure, and what is SCA doing for consumers?

- **Building understanding** – To ensure strata committees understand their choices, options and fee breakdowns as they relate to their insurance policy.
- **Positive consumer outcomes** – To improve relationships, conversations, understanding and outcomes for consumers of strata insurance.
- **Transparency and choice** – To raise the bar of strata insurance transparency, choice and communication.
- **Timely communication** – To provide clear and timely communication, with a minimum of three touch points for communication of strata insurance placement between strata manager and committee – at time of quote, invoice and the AGM.
- **Concise information** – To provide clear and concise information that explains in simple terms the roles and responsibilities of the strata manager, broker and insurer and the strata insurance process.
- **Remuneration disclosure** – FAQs and information about who is paid what, and why, in dollar values and included with invoices, quotes and at the AGM.

SCA's 3 Principles of Best Practice Strata Insurance Disclosure

SCA members will be delivering transparent, timely clear information to consumers based on the following three principles:

DISCLOSE

Strata committees can clearly see what actions are being taken, the parties involved and all remuneration for their insurance policy.

DOCUMENT

Strata committees understand their choices, options and fee breakdowns as they relate to their insurance policy.

COMMUNICATE

Strata committees receive clear, timely, accurate information about their insurance policy.

Standardisation of the information provided on quotes and invoices, such as on the SCA template below, will ensure that strata committees are provided with transparent, timely information to inform their choices.

Invoice template

Itemised Insurance Costs	Previous year *Name*	Current year *Name*
Base Premium Gross (includes commission if applicable)		
ESL or FSL		
Stamp Duty		
Underwriting Agency Fee		
Broker Fee		
GST – all items		
Total insurance costs including GST		
Commission		
Allocation of strata insurance remuneration (where applicable) • Strata manager • Broker		
Conflicts of interest		
Best interests declaration		
Total strata insurance remuneration		

Best Practice – Strata Insurance Disclosure

Consumer Fact Sheet - FAQ

strata community association®

What do strata managers do in relation to strata insurance and why do they receive remuneration?

Strata managers undertake or participate in 47 different services in relation to strata insurance to their clients, including, but not limited to:

- Quotation
- Procurement
- Placement and renewal
- Claims management
- Insurance record keeping
- Correspondence
- Negotiation and liaison
- Advice based on insurance knowledge

The value of strata manager and insurance brokers in the insurance process

- The knowledge and experience the strata manager holds of the insurance landscape as well as the building is an asset to the strata committee and the policy outcome.
- Increased legislative and regulatory requirements, along with buildings which are often complex, mean strata manager and broker expertise is incredibly valuable.
- Insurance brokers provide general and personal advice, drawing on their specialist skills and working closely with the strata manager when involved.
- Specialist brokers work to understand the unique aspects of the building being insured and provide a tailored quote based on the building's particular set of circumstances.

What is strata insurance remuneration?

Strata insurance remuneration is the total value of the remuneration paid to the parties involved in the process of insuring a strata building.

Who is paid strata insurance remuneration?

The two most common parties who receive remuneration will be the strata manager and the insurance broker, however who receives remuneration is based on the arrangement the strata committee chooses:

- Many use a strata manager who works closely with one or more insurance brokers.
- Some contact an independent broker to aid their insurance choice.
- Some strata communities choose to take out insurance directly with insurers.

Do strata communities have choice about remuneration models?

Yes. Strata communities have the choice of several remuneration models, and it is advisable if they wish to alter their current remuneration model to discuss it with their strata manager to fully understand their personal circumstances.

Are all parties who are remunerated as part of the insurance process listed in this section?

Yes. No matter which remuneration model is chosen, all parties who are involved in the insurance process will usually receive remuneration, and you will receive details about how much remuneration they receive.

What about potential conflicts of interest or business arrangements?

If any parties to the insurance process have conflicts of interest, or are receiving other remuneration as part of the transaction, they will list it clearly.

Scan this code to access the guide.

Munro Property Group Pty Ltd
136 The Parade NORWOOD SA 5067
08 8132 2000
bc@munroproperty.com.au
www.munroproperty.com.au

INTERIM REPORTS

for the financial year to 30/09/2026

Community Title Scheme 41146

La Verde, 58 King William Street, KENT TOWN SA 5067

Manager: Jason Nash

	Page
Statement of Financial Position	1
Statement of Financial Performance	2

Statement of Financial Position

As at 23/09/2026

Munro Property Group Pty Ltd
136 The Parade NORWOOD SA 5067
08 8132 2000
bc@munroproperty.com.au
www.munroproperty.com.au

Community Corporation No. 41146 Inc. — La Verde, 58 King William Street, KENT TOWN SA 5067

	Current period
Owners' funds	
Administrative Fund	
Operating Surplus/Deficit--Admin	(16,999.82)
Owners Equity--Admin	31,654.69
	14,654.87
Sinking Fund	
Operating Surplus/Deficit--Sinking	0.00
Owners Equity--Sinking	36,366.31
	36,366.31
Net owners' funds	$51,021.18
Represented by:	
Assets	
Administrative Fund	
Cash at Bank--Admin	14,891.01
Receivable--Owners--Admin	351.75
	15,242.76
Sinking Fund	
Cash at Bank--Sinking	37,207.84
Receivable--Owners--Sinking	0.10
	37,207.94
Unallocated Money	
Cash at Bank--Unallocated	7,162.55
	7,162.55
Total assets	59,613.25
Less liabilities	
Administrative Fund	
Admin-- GST Holding	(5,948.39)
	(5,948.39)
Sinking Fund	
Sinking -- GST Holding	371.11
	371.11
Unallocated Money	
Prepaid Levies--Unallocated	7,162.55
	7,162.55
Total liabilities	1,585.27
Net assets	$58,027.98

* As the previous financial year has not been finalised, the current financial year reporting will not be accurate.

Statement of Financial Performance for the financial year-to-date 01/07/2026 to 23/09/2026

Munro Property Group Pty Ltd
136 The Parade NORWOOD SA 5067
08 8132 2000
bc@munroproperty.com.au
www.munroproperty.com.au

Community Corporation No. 41146 Inc.

La Verde, 58 King William Street, KENT TOWN SA 5067

Administrative Fund

		Current period 01/07/2026-23/09/2026
Revenue		
145005	Recovery--Owner	1,505.30
145104	Recovery-Owner Fobs	242.00
	Total revenue	1,747.30
Less expenses		
150900	Admin--Accounting--Tax Return	281.82
150800	Admin--Auditors--Audit Services	210.00
151401	Admin--Bank Charges--Account Fees	3.84
150600	Admin--Consultant--BAS Prep. & Lodgement	157.27
153800	Admin--Consultant--Disbursements	80.00
151605	Admin--Consultant--Public Officer Fee	22.50
165800	Maint Bldg--Fire Protection	300.00
166400	Maint Bldg--Gate/Roller Door--Remote Controls	103.50
167600	Maint Bldg--Glass	295.66
170200	Maint Bldg--Lift	13,443.65
160800	Maint Bldg--Repairs--Balcony/Stair Railings	469.00
164600	Maint Bldg--Repairs--Doors & Windows	2,780.88
167500	Maint Bldg--Rubbish Chute	493.00
170601	Maint Bldg--Security--Fobs	76.00
173200	Maint Bldg--Security--Keys	30.00
	Total expenses	18,747.12
Surplus/Deficit		(16,999.82)
	Opening balance	38,190.97
Closing balance		$21,191.15

Sinking Fund

	Current period 01/07/2026-23/09/2026
Revenue	
Total revenue	0.00
Less expenses	
Total expenses	0.00
Surplus/Deficit	0.00
Opening balance	36,836.83
Closing balance	$36,836.83

MUNRO™ Property Group Pty Ltd
ABN 41 007 878 079

t 08 8132 2000

Level 1, Suite 3, 136 The Parade
Norwood SA 5067
corporations@munroproperty.com.au
munroproperty.com.au

MINUTES OF THE ANNUAL GENERAL MEETING OF COMMUNITY CORPORATION NO. 41146 INC.

Meeting in accordance with *The Community Titles Act 1996*

La Verde Apartments
58 King William Street, KENT TOWN, SA, 5067

In accordance with *The Community Titles Act 1996 Section 81(1)* the Officers of the Corporation called the Annual General Meeting.

DATE: **21 March 2024**
TIME: **06:00 PM**
LOCATION: **Video Conference**

Attendance

Lot 7	Scheepers Property Pty Ltd	Represented by Lisa Scheepers
Lot 21	Gong Zhang	Owner present
Lot 26	Eve Sullivan	Owner present
Lot 33	Lutz Quinquis Super Nominees Pty Ltd	Represented by Jodie Lutz
Lot 44	Grant & Alexandra Piggott	Represented by Grant Piggott
Lot 46	Lisa Scheepers	Owner present

Others in attendance
Jason Nash and Alice Rogers-Ross on behalf of Munro.

Apologies
Nil.

Proxy Voting

In accordance with *The Community Titles Act 1993 Section 84(3)*, proxies were tabled and subsequently the absentee votes on the proposed agenda have also been tabled as per the *Community Titles Act 1993 Section 84 (11)*.

Lot 4	Lynda Kay	Electronic vote
Lot 8	R Darling	Electronic vote
Lot 9	M E Doddridge	Electronic vote
Lot 11	T McLoughlin	Electronic vote
Lot 12	Rocco Guiseppi Zappia	Proxy Name: Rose-Anne Zappia
Lot 16	Amanda Nicole Wright	Electronic vote
Lot 18	Derek T S & Patrina S Lee	Electronic vote
Lot 25	F A Falco	Electronic vote
Lot 29	A & D Fogden & J & B Hines	Proxy Name: Munro
Lot 30	Justine Mui-Chin Toh	Electronic vote

Lot 31	Masters Investment Trust (SA) Pty Ltd	Electronic vote
Lot 32	E Fowler	Electronic vote
Lot 36	Tejinder S & Serena K Sekhon	Electronic vote
Lot 37	Tejinder S & Serena K Sekhon	Electronic vote
Lot 40	Thomas A Britten-Jones	Electronic vote

Quorum

In accordance with *The Community Titles Act 1996 Section 83(4)*, a quorum is determined by dividing the number of persons entitled to attend and vote (financial members) at the meeting by two, disregarding any fraction and adding one. At the time of the meeting, a quorum was not achieved with only 21 of the 47 financial members present, therefore a new time and date were elected, and the meeting was adjourned.

MINUTES OF THE ANNUAL GENERAL MEETING OF COMMUNITY CORPORATION NO. 41146 INC.

Meeting in accordance with *The Community Titles Act 1996*

La Verde Apartments
58 King William Street, KENT TOWN, SA, 5067

In accordance with *The Community Titles Act 1996 Section 81(1)* the Officers of the Corporation called the Annual General Meeting.

DATE: **4 April 2024**
TIME: **05:00 PM**
LOCATION: **Video Conference**

Attendance

Lot 21	Gong Zhang	Owner present
Lot 26	Eve Sullivan	Owner present
Lot 44	Grant E & Alexandra A Piggott	Represented by Grant PIggott

Others in attendance

Jason Nash and Alice Rogers-Ross on behalf of Munro.

Apologies

Nil.

Proxy Voting

In accordance with *The Community Titles Act 1993 Section 84(3)*, proxies were tabled and subsequently the absentee votes on the proposed agenda have also been tabled as per *The Community Titles Act 1993 Section 84 (11).*

Lot 4	Lynda Kay	Electronic vote
Lot 8	R Darling	Electronic vote
Lot 9	M E Doddridge	Electronic vote
Lot 11	T McLoughlin	Electronic vote
Lot 16	Amanda Nicole Wright	Electronic vote
Lot 18	Derek T S & Patrina S Lee	Electronic vote
Lot 25	F A Falco	Electronic vote

Lot 28	Luke P & Vanessa M Giles	Electronic vote
Lot 29	A & D Fogden & J & B Hines	Proxy Name: Munro
Lot 30	Justine Mui-Chin Toh	Electronic vote
Lot 31	Masters Investment Trust (SA) Pty Ltd	Electronic vote
Lot 32	E Fowler	Electronic vote
Lot 33	Lutz Quinquis Super Nominees Pty Ltd	Electronic vote
Lot 36	Tejinder S & Serena K Sekhon	Electronic vote
Lot 37	Tejinder S & Serena K Sekhon	Electronic vote
Lot 40	Thomas A Britten-Jones	Electronic vote

Quorum

In accordance with *The Community Titles Act 1996 Section 83(4)*, a quorum is determined by dividing the number of persons entitled to attend and vote (financial members) at the meeting by two, disregarding any fraction and adding one. A quorum was declared as per *The Community Titles Act 1996, Section 83(5(c))*, "if a quorum is not formed at the reconvened meeting within half an hour, the persons present and entitled to vote constitute a quorum". The meeting opened at 05:30 PM.

Motions Resolved at the Reconvened Meeting (04 Apr 2024)

MEETING OPENING, APPOINTMENT OF MEETING CHAIRPERSON & MINUTE SECRETARY

Resolved that Jason Nash of Munro would assist the Presiding Officer by conducting the meeting, and that Alice Rogers-Ross would assist the Secretary in the recording of minutes as per *The Community Titles Act 1996 Section 83(3a).*

Motion CARRIED.

Yes: 17 No: 1 Abstain: 0 Inv: 0

DECLARATION OF INTEREST

In accordance with *The Community Titles Act 1996 Section 85*, Munro advised that it is a legal requirement for members to make known to the meeting any direct or indirect financial interest in matters to be voted upon at a properly convened meeting. No declarations were made.

CONFIRMATION OF PREVIOUS MINUTES

Resolved, in accordance with *The Community Titles Act 1996 Section 81(5a)*, that the minutes of the last Annual General Meeting held on the 14th of March 2023 be confirmed as a true record of the proceedings of that meeting.

Motion CARRIED.

Yes: 12 No: 0 Abstain: 6 Inv: 0

ACCEPTANCE OF FINANCIAL STATEMENTS

Motion Amended
Moved Mr Piggot that this motion be deferred until the full audit of accounts has been completed and reviewed. Seconded Ms Sullivan.

Motion CARRIED.

Yes: 3	No: 2	Abstain: 13	Inv: 0

ELECTION OF OFFICE BEARERS

The Chairperson declared the positions vacant and called for nominations for Presiding Officer, Secretary and Treasurer. Resolved in accordance with *The Community Titles Act 1996 Section 76*, that the Corporation fill the positions as follows:

Presiding Officer – Tony Zhang
Secretary – Rocco Zappia (proxy to Rose-Anne Zappia)
Treasurer – Grant Piggott

As per *The Community Titles Act 1996 Section 92*, If a vacancy arises in any of the positions, the position will need to be filled at a General Meeting, or, if the corporation has a management committee, the committee may, by ordinary resolution, appoint a lot owner to fill the vacancy.

Motion CARRIED.

Yes: 16	No: 1	Abstain: 1	Inv: 0

APPOINTMENT OF MANAGEMENT COMMITTEE

The Community Titles Act 1996 Section 92(2) states that: Subject to this Act and to any limitations imposed by the Corporation or by the bylaws of the community scheme, a management committee has full power to transact any business of the corporation.

Munro recommends the appointment of a management committee to ensure that the management consultant has the required directives from the representatives to carry out its business as it sees fit.

Resolved the appointment of a management committee consisting of the office bearers, in addition to Jodie Lutz & Manuel Quinquis, Frank Falco, Eve Sullivan, and Lisa Scheepers; and that the management committee be authorised to give consent for each occurrence of unplanned maintenance work that may occur throughout the year.

Motion CARRIED.

Yes: 15 No: 1 Abstain: 2 Inv: 0

The management committee has the authority to approve quotes, some minor additions, alterations, and approvals, however may (at its discretion) call a General Meeting to consult with all owners on any matter.

Owners are reminded that the management committee does not have the power to authorise anything for which a special or unanimous resolution of the Corporation is required by the Act or the bylaws.

Munro advises that additional fees may apply if a representative is invited to attend committee meetings, assisting with chairing, and recording the minutes.

Should a management consultant not be required, it is the responsibility of the Secretary to ensure that detailed minutes are taken and provided to Munro to hold on file and carry out any requests in accordance with the contract of appointment.

APPOINTMENT OF BODY CORPORATE MANAGER

Resolved that Munro is to be appointed as manager of the Corporation in accordance with *The Community Titles Act 1996 Section 76(9)* and to assist the appointed officer bearers via delegation for the following 12 months; and that the Presiding Officer be authorised to sign the management agreement.

Motion CARRIED.

Yes: 13 No: 1 Abstain: 4 Inv: 0

SERVICES COVERED BY ANNUAL MANAGEMENT FEE

See Management Contract of Appointment

The Manager has the functions and duties provided for under the Act including:

<u>Accounting</u>

- Establish and operate a bank account in the name of the Corporation or a trust account for the Corporation;

- Keep books of account covering all income and expenditure and assets and liabilities of the Corporation;
- Prepare annual financial statements of all income and expenditure and assets and liabilities of the Corporation (the annual accounts);
- Issue notices for fees set and special fees levied by the Corporation;
- Pay invoices on behalf of the Corporation (provided reasonable funds are held by the Corporation);
- Reconciliation of account.

Insurance

- Arrange insurance or renewal only with or through the authorising licensees listed in Clause 1.2 in accordance with the authority(ies) to provide insurance services listed in Clause 1.2, unless the Manager or the Manager's employer holds its own Australian Financial Services Licence covering the provision of the services;
- Arrange a valuation of the cost of reinstatement and replacement of the building/s when requested by the Corporation;
- Prepare and lodge routine insurance claims with insurers/brokers (max. 15 minutes);
- Provide any other insurance services in respect of insurance products offered through the authorising licensees as listed in Clause 1.2, or as otherwise authorised by the Australian Financial Services Licence held by the Manager, or the Manager's employer.

Documentation

- Maintain register of owners' names and addresses;
- Issue all Corporation search certificates and answer reasonable enquiries at the relevant cost of the applicant/enquirer;
- Deal with routine inwards and outward correspondence;
- Keep and supervise the use of the common seal;
- Keep the records of the Owners Corporation including minutes and ballots.

Annual General Meeting

- Convene, submit a budget and financial statement to and record minutes of the Annual General Meeting;Attendance at Annual General Meeting may be charged as Additional Services as set out in 2.2;
- Any meeting held outside the Manager's office may attract a fee for travel time as set out in 2.2;

Maintenance

- Arrange for minor repairs and maintenance of Corporation's common property.

Guidance

- Provide guidance to the Corporation to enable the Corporation to carry out and perform its duties and functions, as set out in this clause.

General

- Generally implement the decisions and instructions of the Corporation with respect to its duties and functions as set out in this contract.

If additional services in Clauses 2.2 and 2.3, and the Special Conditions as stated in the management contract of appointment are provided, they will be charged to the Corporation where applicable. These charges may include government charges, registering as public

officer, disbursements, data storage, audit charges and tax document preparation if necessary. These charges will be debited to the Corporation as actually expended.

INSURANCE

Review of Insurance

As per *The Community Titles Act 1996 Section 103(1a,b) & (2(b,c))* the Corporation must insure the buildings and other improvements (if any) on the common property for the full cost of replacement with new materials, in addition to the building or buildings divided by the strata plan. As per Section 104 of *The Community Titles Act 1996,* the Corporation must also hold fidelity guarantee cover and public liability cover, in addition to any other insurance required by the Act, its regulations or the Corporation bylaws.

As per *The Community Titles Act 1996 Section 103 & 104*, the community insurance must be for the full cost of replacing the buildings or improvements on the common property and in the case of a strata scheme – the building or buildings divided by the strata plan. *The Community Titles Act 1996 Section 106(2)* states "a person who is required by subsection (1) to insure a building must provide to the community corporation such evidence as is required by the regulations of his or her compliance with that requirement."

The insurance policy is held under the primary corporation, Community Corporation No. 41143 Inc.

In accordance with *The Community Titles Act 1996 Section 81(5, d, iiib)* and *The Community Titles Regulations 2011 Regulation 16*, the current insurance details for the corporation are as follows:

Policy Number	Underwriter	Current To	Risk Type	Coverage Amount
HU0038241	CHU 1 Strata Insurance	15 May 2024	Building	$27,000,000.00
			Loss of Rent/Temp Accom(15%)	$4,050,000.00
			Common Area Contents	$250,000.00
			Public Liability	$20,000,000.00
			Voluntary Workers	$200,000.00 / $2,000.00
			Fidelity Guarantee	$200,000.00
			Office Bearers Legal Liability	$250,000.00
			Machinery Breakdown (Over 5Kw)	$100,000.00
			Catastrophe	$8,100,000.00
			Government Audit Costs	$25,000.00
			Appeal Expenses	$100,000.00

			Legal Defence Expenses	$50,000.00
			Lot Fixtures & Improv.(P/L)	$250,000.00
			Flood	Included
TOTAL PREMIUM: $40,777.48				

Munro is an authorised representative of Corporate Home Unit Underwriting Agencies Pty. Ltd and an Authorised Distributor of Strata Community Insurance Pty Ltd.

Owners wanting a copy of the relevant Product Discloser Statement (PDS) or Financial Services Guide (FSG) can download a copy from the relevant insurer's website, or alternatively request one from the Munro office.

Munro is qualified to give general advice and information about insurance, not personal advice. If the Corporation requires specialist insurance advice, Munro can refer the Corporation to an insurance advisor. Munro advised the members that they are not qualified to advise on a replacement value and if guidance is required, the advice of a licensed valuer should be obtained. Munro recommends that the Corporation consider undertaking a valuation every 3-5 years to accommodate for market fluctuations, major catastrophe, and legislation changes.

Munro will not be held responsible for the decision of the Corporation relating to the sum insured and will be indemnified by the Corporation in the event a claim is not met in full due to the Corporation being under or uninsured.

Landlords / Contents Insurance

Munro advises all owners that the Corporation's insurance does not cover the landlord or contents insurance. Each owner is responsible for ensuring that they have cover in place which suits their individual needs. The Corporation's policy also does not include public liability cover for individual units.

Insurance Claims

Owners are advised that any successful claim will attract an excess and will likely affect the premium upon renewal. If a claim is made because of lack of maintenance by the Corporation, the Corporation will be responsible for paying the excess. The owner will generally be responsible for the payment of the excess in all other instances.

Owners are advised that claims made against the Corporation's insurance policy associated with lack of maintenance or naturally occurring deterioration (wear and tear) may be refused by the insurer. The Corporation should ensure that regular repairs and maintenance should be planned and carried out to prevent damage to the common property.

Claims also associated with non-rectification of an insured property defect, error, or omission that you were aware of or should reasonably have been made aware of may also be refused by the insurer.

Owners are further advised that when making a claim against malicious damage, theft, arson etc. a Police Incident Report (PIR) number will be required by the insurer and the report should be made as soon as the insured is aware of the loss.

If owners are unsure as to what is required when making a claim, they are to refer to the insurer's PDS.

Insurance Valuation & Renewal Instructions

In accordance with *The Community Titles Act 1996 Section 103(2),* the Corporation must consider the value of the sum insured to include a total rebuild of the common property. It is stated in *The Community Titles Act 1996 Section 103(3)* that any shortfall resulting in the under insurance must be met by the Corporation members.

Munro advised the members that they are not qualified to advise on a replacement value for insurance purposes owners are to be mindful that in case of a major event, council legislative requirements may have changed over the years thus incurring additional costs when rebuilding and if the members are unsure as to what the policy should be renewed for, they should obtain the advice of a valuer.

It is noted that the Corporation's last valuation was completed on 7 March 2024 by Acumentis SA Pty Ltd with the recommended replacement sum being $36,915,000.00.

Alternatives for Insurance Valuation & Renewal Instructions

(Option A) To resolve that the members consider the current sums insured adequate to cover full replacement value and to keep the same upon renewal as per the obligations under *The Community Titles Act 1996*.

(Option B) To resolve that Munro arranges an insurance valuation to be carried out for the Corporation, and that the sums insured amount be set as per the recommended replacement value.

Motion Withdrawn
The Primary Corporation had since undertaken an insurance valuation after agenda issuance.

COMMON PROPERTY MAINTENANCE

Emergency Works

In the event of a property emergency, Munro is to be contacted in the first instance on 08 8132 2000. In the event of after-hours emergencies, the call will be directed to HPG Insurance & Maintenance Works. Please note that this service is above and beyond the standard service provided and will incur additional charges at an hourly rate.

If the works are not deemed an emergency or are determined to be the responsibility of the owner, costs will be passed to the owner for recovery.

Cleaning / Caretaking

It is noted that the caretaker (Morgan & Hansen Pty Ltd) are no longer offering their services. CBR Property Maintenance has been engaged on a trial period to continue with this service.

Gardening & Grounds Maintenance

It is noted that the caretaker attends to the regular upkeep of the gardens, and Hedgehogs Gardens (the original installer) attends quarterly to carry out pruning, irrigation repairs, etc.

Entrance Doors / Gates

It is noted that the Corporation currently engages Ace Automation for periodic maintenance of the automatic gates. Gate remotes are also arranged through Ace Automation.

It is noted that the Corporation currently engages Dormakaba to service the automatic door 3 times a year at an annual cost of $270 (ex. GST). The contract for this expires on 1 June 2024. Entrance door fobs are arranged through MetroTech.

General Repairs / Maintenance

Resolved that the caretakers carry out minor repairs where possible and notify Munro when larger repairs and maintenance are required.

Motion CARRIED.

Yes: 17	No: 0	Abstain: 1	Inv: 0

Lift Maintenance / Costs

It is noted that the Corporation has a contract with Schindler Lifts (exp. 14 December 2028) for the maintenance of the lifts. It is further noted that Community Corporation No. 41145 Inc. ("SOHO"), and lots 1, 2 & 3 of Community Corporation No. 41144 Inc. (commercial premises) are exempt from contributing to these costs in accordance with bylaw 43, and the resolution passed at the 2023 Annual General Meeting. Special levies are to be raised against Community Corporation No. 41146 Inc. and lots 4, 5 & 6 of Community Corporation No. 41144 Inc. in accordance with lot entitlement and reflected in the budget accordingly.

Munro advised that it had recently come to their attention that the lifts may not be installed with dual-SIM diallers as is required by legislation. This matter is to be referred to the Primary Corporation.

Annual Testing of Backflow Prevention Valves

It is noted that the backflow prevention valves at the property require annual testing by a licenced plumber and a certificate of compliance is to be provided to the Office of Technical Regulator (OTR). Munro has been authorised by the management committee of the Primary Corporation to arrange this annually.

Rubbish Collection

The management committee of the Primary Corporation are currently investigating the possibility of having the City of Norwood, Payneham, and St Peters take over the rubbish collection at the property. This is currently arranged privately through Veolia Environmental Services.

Munro advised that a hard rubbish collection has been arranged for Tuesday 30 April 2024 following reports of dumped rubbish in the carpark. Munro will email all owners and property managers regarding this, along with a reminder that dumping in the common areas is prohibited.

Anchor Point Certification & Window Cleaning

It is noted that the Corporation engages the services of RISSafety Pty Ltd for the annual certification of the anchor points. Investigations are currently being carried out to upgrade the anchor points to enable abseiling for external window cleaning. Once the anchor points have been upgraded, the Corporation intends to proceed with external window cleaning. This matter is to remain with the management committee of the Primary Corporation.

GENERAL BUSINESS

Water Meter Reading & Billing

The previous management had been engaged to read the private water meters at the property and invoice the owners directly for usage. Under instructions from the management committee, Munro engaged the services of Strata Water Solutions, who will continue with this arrangement. The cost for this service will be budgeted for under the secondary corporations.

Residents Handbook / Moving Requests / Pet Approvals

Munro is to update these documents under consultation with the management committee of the Primary Corporation.

Member Register

The members register may be circulated as a confidential document to all owners upon request. Should you prefer not to have your details circulated, please advise the manager in writing.

To ensure you receive all corporation communications, please ensure you advise our office of a valid email address and advise of any contact changes that may occur.

Owners are reminded that correspondence and financial files are available for inspection upon request and with prior arrangement during regular business hours at the offices of Munro Property.

Unanimous Resolutions

Munro advised the meeting that certain motions are required by law to be passed by unanimous resolution, which is defined under *The Community Titles Act 1996 Part 1, Section 3(1)* as a resolution that is passed at a properly convened meeting of the corporation without **any vote being cast against it**.

It was requested that Munro minute that the owner of lot 18 had cast dissenting votes against most motions put forth on the agenda. It is believed that this should be made clear to all owners as to why none of the unanimous resolutions were passed successfully, particularly concerning the recovery of debt collection fees from the owners that incur them.

The unanimous resolutions that have been defeated at this meeting will be put forth again at an Extraordinary General Meeting. Should they be defeated again, the Corporation may choose to apply for relief to the Magistrates Court under Section 142 of *The Community Titles Act 1996*.

ALTERATIONS, ADDITIONS & APPROVALS

Exclusive Use of Common Property - Lot 25 (41146)

To resolve that the owner of lot 25 of Community Corporation No. 41146, be granted exclusive access for a term of five (5) years to the common property marked 'Bike Store D' on the attached plan, for the purposes of ease of access to their allocated carpark.

The management committee have confirmed that this area has never been utilised by the Corporation, nor are there any immediate plans to.

Motion DEFEATED.

Yes: 15	No: 1	Abstain: 3	Inv: 0

Explanatory Note
Owners are advised that Corporation approval may be required for certain things including (but not limited to) prescribed works, pets, and exclusive use of common property. Some approvals require the passing of a special or unanimous resolution and cannot be considered unless the exact wording of the proposal is included in the agenda.

"Prescribed work" in relation to a unit means:
(a) the erection, alteration, demolition or removal of a building;
(b) the alteration of the external appearance of a building.
If owners are unsure if Corporation approval is required, they are to contact Munro for further clarification.

BUDGET & CONTRIBUTIONS

Review & Acceptance of Administration Fund

Motion Amended
Due to potentially inaccurate financial statements from previous years, under-budgeting and GST registration status, a finalised proposed budget was unable to be presented at the meeting.

Resolved, in accordance with *The Community Titles Act 1996 Section 116,* that the Corporation increase the current levy contributions by 10% while the management committee finalise the annual budget. An Extraordinary General Meeting is to be called to formally accept the new proposed budget.

Motion CARRIED.

Yes: 3	No: 0	Abstain: 16	Inv: 0

Review & Acceptance of Sinking Fund

A community corporation requires a sinking fund under *The Community Titles Act 1996 Section 116 (3).* Non-recurrent expenditure must be made from the sinking fund and all other recurrent expenditure of the corporation must be made from the administrative fund.

The sinking fund's purpose is not to be used to offset recurrent expenditure of the Corporation unless instructed so by the elected representatives and is additional to the above administration budget.

Resolved, in accordance with *The Community Titles Act 1996 Section 116,* that the proposed sinking fund budget and consequently the annual contributions being $4,700.00 be accepted.

Motion CARRIED.

Yes: 14	No: 0	Abstain: 5	Inv: 0

Contributions

Both contributions are to be divided by lot entitlement and paid in quarterly instalments.

Forward Budget

Resolved that the management committee be authorised to arrange an updated sinking fund analysis report.

In accordance with *The Community Titles Act 1996 Section 113(1aa)* and *The Community Titles Regulations 2001 Regulation 18A*, corporations that are 20+ lots, with improvements (including buildings or other structures) on the common property insured for $100,000 or more, must present a 5-year forward budget at each Annual General Meeting. This budget must include any proposed expenditure (other than ongoing costs) for a 5-year period.

Munro recommends the Corporation utilise the services of qualified asset surveyors to provide this report should one be required.

Munro advised that this matter is currently being discussed by the management committee of the Primary Corporation.

UNPAID LEVIES POLICY

Approval of Debt Recovery Process for Arrears

Defeated, as per *The Community Titles Act 1996 Section 114(8),* "a contribution, instalment or interest may be recovered as a debt", to adopt the revised policy of debt recovery, which is as follows:

- For levies unpaid 14 days after their due date, owner/s will receive a reminder letter and a text message (stage 1).
- For levies unpaid 60 days after their due date and greater than $50.00, the owner/s will receive a final notice outlining the cost associated with transferring the recovery to a lawyer and a text message (stage 2, cost $55.00).
- For levies unpaid 90 days after their due date and greater than $500.00, the owner/s will receive a notice outlining that the recovery of overdue levies will be transferred to a solicitors' office specialising in debt recovery (stage 3, cost $150.00).
- Any and all additional solicitors' costs will be payable by the owner.

All costs initially will need to be met by the Corporation but will be recovered by the action and applied to the lot owner's account.

Motion DEFEATED.

Yes: 18	No: 1	Abstain: 0	Inv: 0

Munro advises that the above policy is in place as it only requires an ordinary resolution to pass.

The unanimous resolution to recover these costs from the owner who has incurred them however has been defeated.

Interest Charged on Overdue Accounts

As per *The Community Titles Act 1996 Section 14(b)* the Corporation may "fix (in accordance with the regulations) interest payable in respect of a contribution, or an instalment of a contribution, that is in arrears." The Corporation to confirm that the interest rate of 15% per annum remain in place and be applied to owners who fall in arrears with their payments.

Motion CARRIED.

Yes: 17	No: 1	Abstain: 1	Inv: 0

Munro is to be contacted if an owner is having difficulty paying on time, so fees are minimised or negotiated, interest charged may be waived if an adequate payment plan is maintained and adhered to.

APPOINTMENT OF PUBLIC OFFICER

Under *The Income Tax Assessment Act 1936,* a person is required to be nominated to act as public officer for the Corporation. An owner can fill this position however this can present issues should ownership of the lot change at any time.

Resolved that Mr Joshua Baldwin of Munro act as Public Officer as defined under *The Income Tax Assessment Act 1936*.

Motion CARRIED.

Yes: 18	No: 1	Abstain: 0	Inv: 0

ENGAGEMENT OF AUDITOR

Resolved as per *The Community Titles Act 1996 Section 138* that NRM Johnson be engaged to audit the annual statement of accounts.

NRM Johnson is a registered company auditor within the meaning of *The Corporations Act 2001* of the Commonwealth.

Motion CARRIED.

Yes: 17	No: 1	Abstain: 1	Inv: 0

NEXT MEETING DATE & MEETING CLOSURE

The date and time for the next Annual General Meeting is to be set under consultation with the management committee. There being no further business, the meeting was declared closed at 05:49 PM.

MUNRO™ Property Group Pty Ltd
ABN 41 007 878 079

t 08 8132 2000

Level 1, Suite 3, 136 The Parade
Norwood SA 5067
corporations@munroproperty.com.au
munroproperty.com.au

MINUTES OF TH INQUORATE ANNUAL GENERAL MEETING OF COMMUNITY CORPORATION NO. 41146 INC.

Meeting In accordance with the *Community Titles Act 1996*

La Verde
58 King William Street, KENT TOWN, SA, 5067

In accordance with the *Community Titles Act 1996 Section 81(1)* the Officers of the Corporation called the Annual General Meeting.

DATE: **31 July 2025**
TIME: **06:00 PM**
LOCATION: **Room of Quotes, Kent Town Hotel, 76 Rundle Street, KENT TOWN, SA, 5067**

Attendance

Lot 4	Lynda Kay	Electronic vote
Lot 11	T McLoughlin	Electronic vote
Lot 12	Rose-Anne Zappia & Elisabeth De Bono ATF Ed & RFZ Family Trust	Owner present (online, pre-voted)
Lot 13	Angela Ruddenklau	Owner present
Lot 16	Amanda Wright	Electronic vote
Lot 18	Derek T S & Patrina S Lee	Electronic vote
Lot 25	Frank Falco	Owner present (online)
Lot 26	Eve Sullivan	Owner present (online)
Lot 28	Luke P & Vanessa M Giles	Electronic vote
Lot 29	Bruce & Judith Hines	Electronic vote
Lot 31	Masters Investment Trust (SA) Pty Ltd	Electronic vote
Lot 40	Thomas A Britten-Jones	Electronic vote
Lot 44	Grant E & Alexandra A Piggott	Electronic vote

Others in attendance
Alice Rogers-Ross on behalf of Munro.

Apologies
Grant & Alexandra Piggott

Proxy Voting
In accordance with *The Community Titles Act 1993 Section 84(3),* proxies were tabled and subsequently the absentee votes on the proposed agenda have also been tabled as per the *Community Titles Act 1993 Section 84 (11):*

Lot 30	Justine Mui-Chin Toh	Proxy to Stanley Toh

Quorum

In accordance with *The Community Titles Act 1996 Section 83(4)*, a quorum is determined by dividing the number of persons entitled to attend and vote (financial members) at the meeting by two, disregarding any fraction and adding one. At the time of the meeting, a quorum was not achieved with only 14 of the 46 financial lots represented, therefore a new time and date were elected, and the meeting was adjourned.

MINUTES OF THE RECONVENED ANNUAL GENERAL MEETING OF COMMUNITY CORPORATION NO. 41146 INC.

Meeting in accordance with the *Community Titles Act 1996*

La Verde
58 King William Street, KENT TOWN, SA, 5067

In accordance with the *Community Titles Act 1996 Section 81(1)* the Officers of the Corporation called the Annual General Meeting.

DATE: **7 August 2025**
TIME: **06:00 PM**
LOCATION: **Videoconference**

Attendance

Lot 4	Lynda Kay	Electronic vote
Lot 11	T McLoughlin	Electronic vote
Lot 12	Rose-Anne Frances Zappia & Elisabeth De Bono ATF Ed & RFZ Family Trust	Electronic vote
Lot 13	Angela Ruddenklau	Owner present
Lot 14	Sam Culley	Electronic vote
Lot 16	Amanda Wright	Electronic vote
Lot 18	Derek T S & Patrina S Lee	Electronic vote
Lot 21	Gong Zhang	Owner present (pre-voted)
Lot 22	A Corso	Electronic vote
Lot 25	Frank Falco	Owner present (online)
Lot 28	Luke P & Vanessa M Giles	Electronic vote
Lot 29	Bruce & Judith Hines	Electronic vote
Lot 31	Masters Investment Trust (SA) Pty Ltd	Electronic vote
Lot 33	Lutz Quinquis Super Nominees Pty Ltd	Electronic vote
Lot 40	Thomas A Britten-Jones	Electronic vote
Lot 44	Grant E & Alexandra A Piggott	Represented by Grant Piggott (pre-voted)

Others in attendance

Alice Rogers-Ross on behalf of Munro.

Apologies

Nil.

Proxy Voting

In accordance with *The Community Titles Act 1993 Section 84(3),* proxies were tabled and subsequently the absentee votes on the proposed agenda have also been tabled as per the *Community Titles Act 1993 Section 84 (11):*

Lot 30	Justine Mui-Chin Toh	Proxy to Stanley Toh

Quorum

A quorum was declared as per the *Community Titles Act 1996, Section 83(5(c))*, "if a quorum is not formed at the reconvened meeting within half an hour, the persons present and entitled to vote constitute a quorum". The meeting opened at 6:30 PM.

Motions Resolved at the Reconvened Meeting (07 Aug 2025)

MEETING OPENING, APPOINTMENT OF MEETING CHAIRPERSON & MINUTE SECRETARY

Resolved that Alice Rogers-Ross of Munro would assist the Presiding Officer by conducting the meeting; and assist the Secretary in the recording of minutes as per the *Community Titles Act 1996 Section 83(3a).*

Motion CARRIED.

Yes: 15	No: 0	Abstain: 1	Inv: 0

DECLARATION OF INTEREST

In accordance with the *Community Titles Act 1996 Section 85*, it is a legal requirement for members to make known to the meeting any direct or indirect financial interest in matters to be voted upon at a properly convened meeting. No declarations were made.

CONFIRMATION OF PREVIOUS MINUTES

Resolved, in accordance with the *Community Titles Act 1996 Section 81(5a)*, that the minutes of the last Annual General Meeting held on the 16th of January 2025 be confirmed as a true record of the proceedings of that meeting.

Motion CARRIED.

Yes: 10	No: 0	Abstain: 6	Inv: 0

ACCEPTANCE OF FINANCIAL STATEMENTS

Resolved, in accordance with the *Community Titles Act 1996 Section 81(5(d))* and the *Community Titles Regulations 2011 Section 16*, that the full financial statements year ending 30th of June 2025 having been circulated, tabled and discussed be accepted as a true and accurate record of the Corporation's financial standings.

Motion CARRIED.

Yes: 12	No: 0	Abstain: 4	Inv: 0

ELECTION OF OFFICE BEARERS

The Chairperson declared the positions vacant and called for nominations for Presiding Officer, Secretary and Treasurer. Resolved in accordance with the *Community Titles Act 1996 Section 76*, that the Corporation fill the positions as follows:

Presiding Officer - Grant Piggott
Secretary - Rose-Anne Zappia
Treasurer - Tony Zhang

As per the *Community Titles Act 1996 Section 92*, If a vacancy arises in any of the positions, the position will need to be filled at a General Meeting, or, if the corporation has a management committee, the committee may, by ordinary resolution, appoint a lot owner to fill the vacancy.

Motion CARRIED.

Yes: 15	No: 1	Abstain: 0	Inv: 0

APPOINTMENT OF MANAGEMENT COMMITTEE

The *Community Titles Act 1996 Section 92(2)* states that: Subject to this Act and to any limitations imposed by the Corporation or by the bylaws of the community scheme, a management committee has full power to transact any business of the corporation.

Munro recommends the appointment of a management committee to ensure that the management consultant has the required directives from the representatives to carry out its business as it sees fit.

Resolved the appointment of a management committee comprising of the office bearers, along with Tim Matthew, Frank Falco, Eve Sullivan, Lisa Scheepers, Jodie Lutz & Manuel Quinquis; and that the management committee be authorised to give consent for each occurrence of unplanned maintenance work that may occur throughout the year.

Motion CARRIED.

Yes: 16	No: 1	Abstain: 0	Inv: 0

The management committee has the authority to approve quotes, some minor additions, alterations, and approvals, however may (at its discretion) call a General Meeting to consult with all owners on any matter.

Owners are reminded that the management committee does not have the power to authorise anything for which a special or unanimous resolution of the Corporation is required by the Act or the bylaws.

Munro advises that additional fees may apply if a representative is invited to attend committee meetings, assisting with chairing, and recording the minutes.

Should a management consultant not be required, it is the responsibility of the Secretary to ensure that detailed minutes are taken and provided to Munro to hold on file and carry out any requests in accordance with the contract of appointment.

APPOINTMENT OF BODY CORPORATE MANAGER

Resolved that Munro is to be appointed as manager of the Corporation in accordance with the *Community Titles Act 1996 Section 76(9)* and to assist the appointed officer bearers via delegation for the following 12 months; and that the Presiding Officer be authorised to sign the management agreement.

Motion CARRIED.

Yes: 16 No: 1 Abstain: 0 Inv: 0

SERVICES COVERED BY ANNUAL MANAGEMENT FEE

See Management Contract of Appointment

The Manager has the functions and duties provided for under the Act including:

Accounting

- Establish and operate a bank account in the name of the Corporation or a trust account for the Corporation;
- Keep books of account covering all income and expenditure and assets and liabilities of the Corporation;
- Prepare annual financial statements of all income and expenditure and assets and liabilities of the Corporation (the annual accounts);
- Issue notices for fees set and special fees levied by the Corporation;
- Pay invoices on behalf of the Corporation (provided reasonable funds are held by the Corporation);
- Reconciliation of account.

Insurance

- Arrange insurance or renewal only with or through the authorising licensees listed in Clause 1.2 in accordance with the authority(ies) to provide insurance services listed in Clause 1.2, unless the Manager or the Manager's employer holds its own Australian Financial Services Licence covering the provision of the services;
- Arrange a valuation of the cost of reinstatement and replacement of the building/s when requested by the Corporation;
- Prepare and lodge routine insurance claims with insurers/brokers (max. 15 minutes);
- Provide any other insurance services in respect of insurance products offered through the authorising licensees as listed in Clause 1.2, or as otherwise authorised by the Australian Financial Services Licence held by the Manager, or the Manager's employer.

Documentation

- Maintain register of owners' names and addresses;
- Issue all Corporation search certificates and answer reasonable enquiries at the relevant cost of the applicant/enquirer;
- Deal with routine inwards and outward correspondence;
- Keep and supervise the use of the common seal;
- Keep the records of the Owners Corporation including minutes and ballots.

Annual General Meeting

- Convene, submit a budget and financial statement to and record minutes of the Annual General Meeting;

- Attendance at Annual General Meeting may be charged as Additional Services as set out in 2.2;
- Any meeting held outside the Manager's office may attract a fee for travel time as set out in 2.2.

Maintenance

- Arrange for minor (< $1,000 or 15 minutes) repairs and maintenance of Corporation's common property.

Guidance

- Provide guidance to the Corporation to enable the Corporation to carry out and perform its duties and functions, as set out in this clause.

General

- Generally implement the decisions and instructions of the Corporation with respect to its duties and functions as set out in this contract.

If additional services in Clauses 2.2 and 2.3, and the Special Conditions as stated in the management contract of appointment are provided, they will be charged to the Corporation where applicable. These charges may include government charges, registering as public officer, disbursements, data storage, audit charges and tax document preparation if necessary. These charges will be debited to the Corporation as actually expended.

INSURANCE

Insurance Details

As per the *Community Titles Act 1996 Section 103(1a) & (2(b,c))* the Corporation must insure the buildings and other improvements (if any) on the common property for the full cost of replacement with new materials. As per Section 104 of the *Community Titles Act 1996*, the Corporation must also hold fidelity guarantee cover and public liability cover, in addition to any other insurance required by the Act, its regulations or the Corporation bylaws.

The insurance policy is enacted by the primary, Community Corporation No. 41143 Inc.

In accordance with the *Community Titles Act 1996 Section 81(5, d, iiib)* and the *Community Titles Regulations 2011 Regulation 16*, the current insurance details for the Corporation are included in the table below.

Policy Number	Underwriter	Current To	Risk Type	Coverage Amount
HU0038241	CHU Underwriting Agencies Pty Ltd	15 May 2026	Building	$36,915,000.00
			Loss of Rent/Temp Accom(15%)	$5,537,250.00
			Common Area Contents	$262,500.00
			Public Liability	$20,000,000.00
			Voluntary Workers	$200,000.00 / $2,000.00

			Fidelity Guarantee	$200,000.00
			Office Bearers Legal Liability	$250,000.00
			Machinery Breakdown (Over 5Kw)	$100,000.00
			Catastrophe	$11,074,500.00
			Government Audit Costs	$25,000.00
			Appeal Expenses	$100,000.00
			Legal Defence Expenses	$50,000.00
			Lot Fixtures & Improv.(P/L)	$250,000.00
			Flood	Included
			Extended cover - Rent/Temp Accommodation	$1,661,175.00
			Escalation in Cost of Temp Accommodation	$553,725.00
			Cost of Storage and Evacuation	$553,725.00
TOTAL PREMIUM: $67,979.49				

Munro is qualified to give general advice and information about insurance, not personal advice. If the Corporation requires specialist insurance advice, Munro can refer the Corporation to an insurance advisor. Munro advised the members that they are not qualified to advise on a replacement value and if guidance is required, the advice of a licensed valuer should be obtained. Munro recommends that the Corporation consider undertaking a valuation every 3-5 years to accommodate for market fluctuations, major catastrophe, and legislation changes.

Munro will not be held responsible for the decision of the Corporation relating to the sum insured and will be indemnified by the Corporation in the event a claim is not met in full due to the Corporation being under or uninsured.

Valuation

In accordance with the *Community Titles Act 1996 Section 103(2)*, the Corporation must consider the value of the sum insured to include a total rebuild of the common property. It is stated in the *Community Titles Act 1996 Section 103(3)* that any shortfall resulting in the under insurance must be met by the Corporation members.

Munro advises members that they are not qualified to advise on a replacement value for insurance purposes owners are to be mindful that in case of a major event, council legislative requirements may have changed over the years thus incurring additional costs when rebuilding and if the members are unsure as to what the policy should be renewed for, they should obtain the advice of a valuer.

It is noted that the Corporation's last valuation was completed on 07 Mar 2024 by Acumentis (SA) Pty Ltd with the recommended replacement sum being $36,915,000.00.

Determination of Sums Insured

Resolved that the Corporation requests the primary to confirm, vary or extend the sums insured by a majority vote on the following options.

Motion CARRIED.

Yes: 16	No: 0	Abstain: 2	Inv: 0

Alternatives for Determination of Sums Insured

(Option A) To resolve that the Corporation increase the building sum insured by CPI or 5% (whichever is greater) upon renewal.

(Option B) To resolve that the members consider the current sums insured adequate to cover full replacement value and extend the policy to keep the same upon renewal as per the obligations under the *Community Titles Act 1996*.

(Option C) To resolve that Munro arranges an insurance valuation to be carried out for the Corporation, and that the sums insured amount be set as per the recommended replacement value.

'OPTION B' has been selected with the highest votes.

A: 4	B: 9	C: 4	Inv: 0

Authorised Representatives / Distributors

Munro Property is an Authorised Representative of Corporate Home Unit Underwriting Agencies Pty. Ltd and an Authorised Distributor of Strata Community Insurance Pty Ltd.

Placement of Insurance

Resolved that the Corporation requests the primary extends the renewal date to coincide with the Annual General Meeting,

Should no clear instructions be received, in order to remain compliant with legislation and to ensure that the common property remains insured at all times, Munro is authorised to automatically renew the Corporation insurance policy before maturity each year at the limits of cover held by the Corporation.

Motion CARRIED.

Yes: 16	No: 0	Abstain: 1	Inv: 0

General Information

Landlords / Contents Insurance

Munro advises all owners that the Corporation's insurance does not cover the landlord or contents insurance. Each owner is responsible for ensuring that they have cover in place which suits their individual needs. The Corporation's policy also does not include public liability cover for individual units.

Insurance Claims

Owners are advised that any successful claim will attract an excess and will likely affect the premium upon renewal. If a claim is made because of lack of maintenance by the Corporation, the Corporation will be responsible for paying the excess. The owner will generally be responsible for the payment of the excess in all other instances.

Owners are advised that claims made against the Corporation's insurance policy associated with lack of maintenance or naturally occurring deterioration (wear and tear) may be refused by the insurer. The Corporation should ensure that regular repairs and maintenance should be planned and carried out to prevent damage to the common property.

Claims also associated with non-rectification of an insured property defect, error, or omission that you were aware of or should reasonably have been made aware of may also be refused by the insurer.

Owners are further advised that when making a claim against malicious damage, theft, arson etc. a Police Incident Report (PIR) number will be required by the insurer and the report should be made as soon as the insured is aware of the loss.

If owners are unsure as to what is required when making a claim, they are to refer to the insurer's Product Disclosure Statement (PDS).

ALTERATIONS, ADDITIONS & APPROVALS

No applications were submitted for consideration.

Owners are advised that Corporation approval may be required for certain things including (but not limited to) prescribed works, pets, and exclusive use of common property. Some approvals require the passing of a special or unanimous resolution and cannot be considered unless the exact wording of the proposal is included in the agenda.

"Prescribed work" in relation to a unit means:
(a) the erection, alteration, demolition or removal of a building;
(b) the alteration of the external appearance of a building.

If owners are unsure if Corporation approval is required, they are to contact Munro for further clarification.

COMMON PROPERTY MAINTENANCE

Lift Maintenance / Costs (Standing Arrangement)

It is noted that the Corporation has a contract with Schindler Lifts (exp. 14 December 2028) for the maintenance of the lifts. It is further noted that Community Corporation No. 41145 Inc. ("SOHO"), and lots 1, 2 & 3 of Community Corporation No. 41144 Inc. (commercial premises) are exempt from contributing to these costs in accordance with bylaw 43, and the resolution passed at the 2023 Annual General Meeting. $9,306.24 ex. GST has been included in the proposed budget for CC 41146's portion.

Emergency Works

In the event of a property emergency, Munro is to be contacted in the first instance on 08 8132 2000. In the event of after-hours emergencies, the call will be directed to HPG Insurance & Maintenance Works. Please note that this service is above and beyond the standard service provided and will incur additional charges at an hourly rate.

If the works are not deemed an emergency or are determined to be the responsibility of the owner, costs will be passed to the owner for recovery.

Atrium Issues

Munro advises that in April, one of the owners reported that the flashing on the fifth-level walkway was starting to come away. Munro arranged for Tradeworks to attend, and they carried out a temporary makesafe. They advised that the issue was caused by the Boston ivy growing up the atrium walls.

The manager met with Hedgehogs Gardens onsite in May. They advised that while support wires were installed for the ivy on the lower levels, none were placed on the upper levels. As a result, the ivy has used the building itself for support and has worked its way under the flashing.
This matter was referred to the committee, and the general consensus was to keep the ivy. Munro is in the process of coordinating with both Hedgehogs and Tradeworks to remove the ivy temporarily, install support wires, repair the flashing and reinstate the ivy.

The owner of 29 requested that Munro convey to the meeting their concerns about the creepers on internal walls and balustrades, noting they are becoming overgrown and problematic. Issues include encroachment onto rendered walls, increased leaf litter requiring ongoing cleaning, and slip hazards on walkways, particularly when wet. They advised that the plants provide limited shading benefits in summer and appear untidy in winter, leaving visible stains. The owner suggested considering removal due to maintenance costs, safety concerns, and alternative shading provided by existing shrubs and trees.

After some discussion, it was generally agreed that the creepers should be kept, but the management committee may adjust its position if the cost outweighs the benefit.

Timber Treatment

The manager advised that they are requesting quotes for treatment of the timber atrium flooring and balustrades.

PRIMARY CORPORATION MATTERS

Anchor Point Installation (Business Arising)

While investigating window cleaning options, it was identified that the existing anchor points at La Verde are fall-arrestor anchor points only—suitable for roof work, but not for façade access. Munro obtained several quotes for the installation of appropriate anchor points (attached to the agenda):

- Adelaide Height Safety quoted $11,879 for the installation of 42 anchor points, providing access to all windows.
- Vertigo quoted $13,696 for the installation of 60 anchor points, providing access to all windows and light wells.

During the year, the committee requested further clarification regarding the number and placement of the proposed anchor points, specifically whether full façade access could be achieved rather than limited window access. In response, Adelaide Height Safety submitted an alternative quote for the installation of 87 anchor points to provide comprehensive access to the entire façade for $24,248. They advised that a full façade system would offer significant long-term benefits, including access for both reactive repairs and planned maintenance, and may also reduce future costs by eliminating the need for additional equipment such as elevated work platforms or scaffolding.

Resolved that the Corporation registers its interest to proceed with the installation of abseiling anchor points.

Motion CARRIED.

Yes: 11	No: 2	Abstain: 4	Inv: 0

Alternatives for Anchor Point Installation (Business Arising)

(Option A) To resolve to proceed with the quote from Adelaide Height Safety for $11,879 for the installation of 42 anchor points, providing access to all windows.

(Option B) To proceed with Vertigo for $13,696 for the installation of 60 anchor points, providing access to all windows and light wells.

(Option C) To resolve to proceed with the quote from Adelaide Height Safety for the installation of 87 anchor points to provide comprehensive access to the entire façade for $24,248.

'OPTION C' has been selected with the highest votes.

A: 4	B: 4	C: 9	Inv: 0

EV Charging (Business Arising)

Over the past year, the management committee has been investigating various options for electric vehicle (EV) charging. The discussion began as a proactive measure to ensure the building remains as future-proof as possible; however, the need for a formal EV charging policy soon became apparent.

Currently, two owners have installed EV chargers in their car parks at their own cost. These chargers are connected to their apartments' individual electricity meters. However, there is currently no load management system in place. This poses a risk: if more owners install similar chargers, the cumulative demand could overload the site's electrical infrastructure.

To address this, the committee investigated suitable solutions. The most viable option identified was the installation of an EV "backbone" infrastructure, including a load management system. Under this model, the Corporation would install the backbone, and individual owners would be responsible for connecting their chargers to it as needed.

A quote for the proposed system was obtained from YES Group (attached to the agenda) for approximately $65,000. Alternative quotes were requested but have not been received to date. The committee has resolved to consult with all owners to gauge interest in the project before proceeding further.

Owners are requested to note that if the majority do not wish to proceed with the installation of the EV infrastructure, it is unlikely that the Corporation will approve any further individual EV charger installations at the property.

Defeated to proceed in principle with the installation of an Electric Vehicle backbone.

Motion DEFEATED.

Yes: 6	No: 9	Abstain: 2	Inv: 0

GENERAL BUSINESS

GST Registration (Business Arising)

Munro advises that the Corporation is now registered for GST.

Member Register

To ensure you receive all communications from the corporation, please provide Munro Property with a valid email address and notify them promptly of any changes to your contact information.

The members register is a confidential document and distribution of this register must comply with the *Privacy Act 1988*. Requests for access to other members' details should be directed in writing to the secretary of the Corporation. If you prefer not to have your details circulated to other owners, please inform Munro Property in writing.

Owners are reminded that correspondence and financial records are available for inspection by appointment during regular business hours at the offices of Munro Property.

BUDGET & CONTRIBUTIONS

Review & Acceptance of Administration Fund

Resolved, in accordance with the *Community Titles Act 1996 Section 116,* that the proposed administration budget and consequently the annual contributions being $213,000 + GST be accepted.

Motion CARRIED.

Yes: 12	No: 0	Abstain: 4	Inv: 0

Administration funds are collected to pay recurrent expenditure of the Corporation such as the insurance premium.

Review & Acceptance of Sinking Fund

A community corporation requires a sinking fund under the *Community Titles Act 1996 Section 116 (3).* Non-recurrent expenditure must be made from the sinking fund and all other recurrent expenditure of the corporation must be made from the administrative fund.

Resolved, in accordance with the *Community Titles Act 1996 Section 116,* that the proposed sinking fund budget and consequently the annual contributions being $470.00 + GST be accepted.

The sinking fund's purpose is not to offset recurrent expenditure of the Corporation (unless instructed so by the elected representatives) and is additional to the above administration budget.

Motion CARRIED.

Yes: 13	No: 0	Abstain: 3	Inv: 0

Mr Toh requested that the owners consider that the lifts will need replacement in the future, and that the sinking fund should reflect this. He also queried how the lift replacement would be funded, considering the current arrangement of the lift maintenance cost split. Munro is to investigate and advise.

Contributions

Both contributions are to be divided by lot entitlement and paid in quarterly instalments.

Forward Budget

In accordance with the *Community Titles Act 1996 Section 113(1aa)* and the *Community Titles Regulations 2001 Regulation 18A*, corporations that are 20+ lots, with improvements (including buildings or other structures) on the common property insured for $100,000 or more, must present a 5-year forward budget at each Annual General Meeting. This budget must include any proposed expenditure (other than ongoing costs) for a 5-year period.

Alternatives for Forward Budget

(Option A) To resolve to obtain an updated sinking fund analysis report for the purposes of long-term budgeting. This is to be sent to the management committee for further instructions once received.

(Option B) To resolve that a sinking fund analysis report is not required at this time as a sinking fund analysis has been carried out in the last 3 years.

'OPTION B' has been selected with the highest votes.

A: 6	B: 11	Inv: 0

UNPAID LEVIES POLICY

Approval of Debt Recovery Process for Arrears

Resolved as per the *Community Titles Act 1996 Section 114(8)*, which provides that "a contribution, instalment or interest may be recovered as a debt", the Corporation hereby adopts (or reaffirms, where previously adopted) the following debt recovery policy:

- For levies unpaid 14 days after their due date, owner/s will receive a reminder letter and a text message (stage 1).
- For levies unpaid 60 days after their due date and greater than $50.00, the owner/s will receive a final notice outlining the cost associated with transferring the recovery to a lawyer and a text message (stage 2, cost $55.00).
- For levies unpaid 90 days after their due date and greater than $500.00, the owner/s will receive a notice outlining that the recovery of overdue levies will be transferred to a solicitors' office specialising in debt recovery (stage 3, cost $150.00).

Munro is to be contacted if an owner is having difficulty paying on time, so fees are minimised or negotiated, interest charged may be waived if an adequate payment plan is maintained and adhered to.

Motion CARRIED.

Yes: 15	No: 1	Abstain: 1	Inv: 0

Approval of Recovery of Debt Collection Fees

Defeated that all fees incurred by the Corporation associated with the debt recovery process (including, but not limited to, solicitors' fees and court costs) will be payable by the owner, recovered by the action and applied to the lot owner's account.

Motion DEFEATED.

Yes: 15	No: 1	Abstain: 0	Inv: 0

Manager's Note: As per the *Community Titles Act 1996*, a unanimous resolution cannot pass if any votes are cast against it. With one vote cast against by the owner of lot 18, the motion was defeated and may hinder the Corporation's ability to recoup fees associated with debt recovery.

The Corporation may choose to apply for relief to the Magistrates Court under Section 142 of the *Community Titles Act 1996*. This matter will be referred to the management committee if required.

Interest Charged on Overdue Accounts

As per the *Community Titles Act 1996 Section 14(b)*, the Corporation may "fix (in accordance with the regulations) interest payable in respect of a contribution, or an instalment of a contribution, that is in arrears."

Resolved that the Corporation resolve to adopt, or (where previously adopted) reaffirm, an interest rate of 15% per annum to be applied to contributions in arrears, in accordance with the Act.

Motion CARRIED.

Yes: 11	No: 2	Abstain: 3	Inv: 0

APPOINTMENT OF PUBLIC OFFICER

Under the *Income Tax Assessment Act 1936,* a person is required to be nominated to act as public officer for the Corporation. An owner can fill this position however this can present issues should ownership of the lot change at any time.

Resolved that Mr Joshua Baldwin of Munro act as Public Officer as defined under the *Income Tax Assessment Act 1936*.

Motion CARRIED.

Yes: 13	No: 1	Abstain: 2	Inv: 0

ENGAGEMENT OF AUDITOR

Resolved as per the *Community Titles Act 1996 Section 138* that NRM Johnson be engaged to audit the annual statement of accounts.

NRM Johnson is a registered company auditor within the meaning of the *Corporations Act 2001* of the Commonwealth.

Motion CARRIED.

Yes: 13	No: 0	Abstain: 3	Inv: 0

NEXT MEETING DATE & MEETING CLOSURE

The date and time for the next Annual General Meeting under consultation with the management committee. There being no further business, the meeting was declared closed at 06:55 PM.

Munro Property Group Pty Ltd
136 The Parade NORWOOD SA 5067
08 8132 2000
bc@munroproperty.com.au
www.munroproperty.com.au

Approved Budget
to apply from 01/07/2025

Community Corporation No. 41146 Inc. — La Verde, 58 King William Street, KENT TOWN SA 5067

Administrative Fund

	Approved budget
Revenue	
Levies Due--Admin	213,000.00
Total revenue	213,000.00
Less expenses	
Admin--Accounting--Tax Return	268.10
Admin--Auditors--Audit Services	755.00
Admin--Bank Charges--Account Fees	25.00
Admin--Consultant--BAS Prep. & Lodgement	600.00
Admin--Consultant--Meeting Fee	250.00
Admin--Consultant--Public Officer Fee	90.00
Admin--Levy Contribution--Primary Admin	163,485.02
Admin--Levy Contribution--Primary Sinking	27,323.02
Maint Bldg--Lift	9,306.24
Maint Bldg--Rubbish Chute	500.00
Services--Meter Reading	2,600.00
Total expenses	205,202.38
Surplus/Deficit	7,797.62
Opening balance	31,654.69
Closing balance	$39,452.31
Total units of entitlement	10000
Levy contribution per unit entitlement	$23.43
Budgeted standard levy revenue	213,000.00
Add GST	21,300.00
Amount to raise in levies including GST	$234,300.00

Sinking Fund

	Approved budget
Revenue	
Levies Due--Sinking	470.00
Total revenue	470.00
Surplus/Deficit	470.00
Opening balance	36,366.31
Closing balance	$36,836.31
Total units of entitlement	10000
Levy contribution per unit entitlement	$0.05
Budgeted standard levy revenue	470.00
Add GST	47.00
Amount to raise in levies including GST	$517.00

MUNRO™ Property Group Pty Ltd
ABN 41 007 878 079

t 08 8132 2000

Level 1, Suite 3, 136 The Parade
Norwood SA 5067
corporations@munroproperty.com.au
munroproperty.com.au

MINUTES OF THE ANNUAL GENERAL MEETING OF COMMUNITY CORPORATION NO. 41146 INC.

Meeting In accordance with the *Community Titles Act 1996*

La Verde
58-60 King William Street, KENT TOWN, SA, 5067

In accordance with the *Community Titles Act 1996 Section 81(1)* the Officers of the Corporation called the Annual General Meeting.

DATE: **16 January 2025**
TIME: **06:00 PM**
LOCATION: **Videoconference**

Attendance

Lot 1	S Davies	Electronic vote
Lot 4	Lynda Kay	Electronic vote
Lot 7	Scheepers Property Pty Ltd	Represented by Lisa Scheepers
Lot 9	M Doddridge	Electronic vote
Lot 11	T McLoughlin	Electronic vote
Lot 14	Sam Culley	Electronic vote
Lot 16	Amanda Wright	Electronic vote
Lot 18	Derek & Patrina Lee	Electronic vote
Lot 25	F Falco	Owner present
Lot 26	Eve Sullivan	Owner present
Lot 28	Luke & Vanessa Giles	Electronic vote
Lot 29	Bruce Hines & Judith Hines	Electronic vote
Lot 31	Masters Investment Trust (SA) Pty Ltd	Electronic vote
Lot 33	Lutz Quinquis Super Nominees Pty Ltd	Electronic vote
Lot 36	Tejinder & Serena Sekhon	Electronic vote
Lot 37	Tejinder & Serena Sekhon	Electronic vote
Lot 40	Thomas Britten-Jones	Electronic vote
Lot 42	K Keough	Owner present (pre-voted)
Lot 44	Grant & Alexandra Piggott	Represented by Grant Piggott
Lot 45	T Matthew & G Laguda	Represented by Tim Matthew
Lot 46	Lisa Scheepers	Owner present

Others in attendance
Alice Rogers-Ross on behalf of Munro.

Apologies
Nil.

Proxy Voting

In accordance with the *Community Titles Act 1993 Section 84(3),* proxies were tabled and subsequently the absentee votes on the proposed agenda have also been tabled as per the *Community Titles Act 1993 Section 84(11).*

Lot 12	Rocco Zappia	Proxy Name: Rose-Anne Zappia
Lot 30	Justine Mui-Chin Toh	Proxy Name: Stanley Toh
Lot 32	E Fowler	Proxy Name: Grant Piggott
Lot 41	Puay K & Donna L Lim	Proxy Name: Munro Representative

Quorum

In accordance with the *Community Titles Act 1996 Section 83(4)*, a quorum is determined by dividing the number of persons entitled to attend and vote (financial members) at the meeting by two, disregarding any fraction and adding one. At the time of the meeting, 25 of the 47 financial lots were represented, therefore the meeting opened at 06:17 PM.

MEETING OPENING, APPOINTMENT OF MEETING CHAIRPERSON & MINUTE SECRETARY

Resolved that Alice Rogers-Ross of Munro would assist the Presiding Officer by conducting the meeting; and assist the Secretary in the recording of minutes as per the *Community Titles Act 1996 Section 83(3a).*

Passed by Simple Majority

DECLARATION OF INTEREST

In accordance with the *Community Titles Act 1996 Section 85*, it is a legal requirement for members to make known to the meeting any direct or indirect financial interest in matters to be voted upon at a properly convened meeting. No declarations were made.

CONFIRMATION OF PREVIOUS MINUTES

Resolved, in accordance with the *Community Titles Act 1996 Section 81(5a),* that the minutes of the last Extraordinary General Meeting held on the 3rd of October 2024 be confirmed as a true record of the proceedings of that meeting.

Passed by Simple Majority

ACCEPTANCE OF FINANCIAL STATEMENTS

Resolved, in accordance with the *Community Titles Act 1996 Section 81(5(d))* and *The Community Titles Regulations 2011 Section 16,* that the full financial statements year ending 30th of November 2024 having been circulated, tabled and discussed be accepted as a true and accurate record of the Corporation's financial standings.

Passed by Simple Majority

ELECTION OF OFFICE BEARERS

The Chairperson declared the positions vacant and called for nominations for Presiding Officer, Secretary and Treasurer. Resolved in accordance with the *Community Titles Act 1996 Section 76*, that the Corporation fill the positions as follows:

Presiding Officer – Grant Piggott
Secretary – Rocco Zappia (proxy to Rose-Anne Zappia)
Treasurer – Tony Zhang

As per the *Community Titles Act 1996 Section 92*, If a vacancy arises in any of the positions, the position will need to be filled at a General Meeting, or, if the corporation has a management committee, the committee may, by ordinary resolution, appoint a lot owner to fill the vacancy.

Passed by Simple Majority

APPOINTMENT OF MANAGEMENT COMMITTEE

The *Community Titles Act 1996 Section 92(2)* states that: Subject to this Act and to any limitations imposed by the Corporation or by the bylaws of the community scheme, a management committee has full power to transact any business of the corporation.

Munro recommends the appointment of a management committee to ensure that the management consultant has the required directives from the representatives to carry out its business as it sees fit.

Resolved the appointment of a management committee comprising of the office bearers, along with Jodie Lutz, Manuel Quinquis, Frank Falco, Eve Sullivan, Lisa Scheepers and Tim Matthews; and that the management committee be authorised to give consent for each occurrence of unplanned maintenance work that may occur throughout the year.

Passed by Simple Majority

The management committee has the authority to approve quotes, some minor additions, alterations, and approvals, however may (at its discretion) call a General Meeting to consult with all owners on any matter.

Owners are reminded that the management committee does not have the power to authorise anything for which a special or unanimous resolution of the Corporation is required by the Act or the bylaws.

Munro advises that additional fees may apply if a representative is invited to attend committee meetings, assisting with chairing, and recording the minutes.

Should a management consultant not be required, it is the responsibility of the Secretary to ensure that detailed minutes are taken and provided to Munro to hold on file and carry out any requests in accordance with the contract of appointment.

APPOINTMENT OF BODY CORPORATE MANAGER

Resolved that Munro is to be appointed as manager of the Corporation in accordance with the *Community Titles Act 1996 Section 76(9)* and to assist the appointed officer bearers via delegation for the following 12 months; and that the Presiding Officer be authorised to sign the management agreement.

Passed by Simple Majority

SERVICES COVERED BY ANNUAL MANAGEMENT FEE

See Management Contract of Appointment

The Manager has the functions and duties provided for under the Act including:

Accounting

- Establish and operate a bank account in the name of the Corporation or a trust account for the Corporation;
- Keep books of account covering all income and expenditure and assets and liabilities of the Corporation;
- Prepare annual financial statements of all income and expenditure and assets and liabilities of the Corporation (the annual accounts);
- Issue notices for fees set and special fees levied by the Corporation;
- Pay invoices on behalf of the Corporation (provided reasonable funds are held by the Corporation);
- Reconciliation of account.

Insurance

- Arrange insurance or renewal only with or through the authorising licensees listed in Clause 1.2 in accordance with the authority(ies) to provide insurance services listed in Clause 1.2, unless the Manager or the Manager's employer holds its own Australian Financial Services Licence covering the provision of the services;
- Arrange a valuation of the cost of reinstatement and replacement of the building/s when requested by the Corporation;
- Prepare and lodge routine insurance claims with insurers/brokers (max. 15 minutes);
- Provide any other insurance services in respect of insurance products offered through the authorising licensees as listed in Clause 1.2, or as otherwise authorised by the Australian Financial Services Licence held by the Manager, or the Manager's employer.

Documentation

- Maintain register of owners' names and addresses;
- Issue all Corporation search certificates and answer reasonable enquiries at the relevant cost of the applicant/enquirer;
- Deal with routine inwards and outward correspondence;
- Keep and supervise the use of the common seal;
- Keep the records of the Owners Corporation including minutes and ballots.

Annual General Meeting

- Convene, submit a budget and financial statement to and record minutes of the Annual General Meeting;

- Attendance at Annual General Meeting may be charged as Additional Services as set out in 2.2;
- Any meeting held outside the Manager's office may attract a fee for travel time as set out in 2.2.

Maintenance

- Arrange for minor (< $1,000 or 15 minutes) repairs and maintenance of Corporation's common property.

Guidance

- Provide guidance to the Corporation to enable the Corporation to carry out and perform its duties and functions, as set out in this clause.

General

- Generally implement the decisions and instructions of the Corporation with respect to its duties and functions as set out in this contract.

If additional services in Clauses 2.2 and 2.3, and the Special Conditions as stated in the management contract of appointment are provided, they will be charged to the Corporation where applicable. These charges may include government charges, registering as public officer, disbursements, data storage, audit charges and tax document preparation if necessary. These charges will be debited to the Corporation as actually expended.

INSURANCE

Insurance Details

As per the *Community Titles Act 1996 Section 103(1a) & (2(b,c))* the Corporation must insure the buildings and other improvements (if any) on the common property for the full cost of replacement with new materials. As per Section 104 of the *Community Titles Act 1996*, the Corporation must also hold fidelity guarantee cover and public liability cover, in addition to any other insurance required by the Act, its regulations or the Corporation bylaws.

In accordance with the *Community Titles Act 1996 Section 81(5, d, iiib)* and the *Community Titles Regulations 2011 Regulation 16*, the current insurance details for the Corporation are included in the table below (held by the Primary Corporation).

Policy Number	Underwriter	Current To	Risk Type	Coverage Amount
HU0038241	CHU Underwriting Agencies Pty Ltd	15 May 2025	Building	$36,915,000.00
			Loss of Rent/Temp Accom(15%)	$5,537,250.00
			Common Area Contents	$262,500.00
			Public Liability	$20,000,000.00
			Voluntary Workers	$200,000.00 / $2,000.00
			Fidelity Guarantee	$200,000.00

			Office Bearers Legal Liability	$250,000.00
			Machinery Breakdown (Over 5Kw)	$100,000.00
			Catastrophe	$11,074,500.00
			Government Audit Costs	$25,000.00
			Appeal Expenses	$100,000.00
			Legal Defence Expenses	$50,000.00
			Lot Fixtures & Improv.(P/L)	$250,000.00
			Flood	Included
			Extended cover - Rent/Temp Accommodation	$1,661,175.00
			Escalation in Cost of Temp Accommodation	$553,725.00
			Cost of Storage and Evacuation	$553,725.00
TOTAL PREMIUM: $67,979.53				

Munro is qualified to give general advice and information about insurance, not personal advice. If the Corporation requires specialist insurance advice, Munro can refer the Corporation to an insurance advisor. Munro advised the members that they are not qualified to advise on a replacement value and if guidance is required, the advice of a licensed valuer should be obtained. Munro recommends that the Corporation consider undertaking a valuation every 3-5 years to accommodate for market fluctuations, major catastrophe, and legislation changes.

Munro will not be held responsible for the decision of the Corporation relating to the sum insured and will be indemnified by the Corporation in the event a claim is not met in full due to the Corporation being under or uninsured.

Valuation

In accordance with the *Community Titles Act 1996 Section 103(2)*, the Corporation must consider the value of the sum insured to include a total rebuild of the common property. It is stated in the *Community Titles Act 1996 Section 103(3)* that any shortfall resulting in the under insurance must be met by the Corporation members.

Munro advises members that they are not qualified to advise on a replacement value for insurance purposes owners are to be mindful that in case of a major event, council legislative requirements may have changed over the years thus incurring additional costs when rebuilding and if the members are unsure as to what the policy should be renewed for, they should obtain the advice of a valuer.

It is noted that the Corporation's last valuation was completed on 07 Mar 2024 by Acumentis SA Pty Ltd under the Primary Corporation with the recommended replacement sum being $36,915,000.00.

Determination of Sums Insured

Resolved that the Corporation confirm, vary or extend the sums insured by a majority vote on the following options.

Passed by Simple Majority

Alternatives for Determination of Sums Insured

(Option A) To resolve that the Corporation increase the building sum insured by CPI or 5% (whichever is greater) upon renewal.

(Option B) To resolve that the members consider the current sums insured adequate to cover full replacement value and extend the policy to keep the same upon renewal as per the obligations under the *Community Titles Act 1996*.

(Option C) To resolve that Munro arranges an insurance valuation to be carried out for the Corporation, and that the sums insured amount be set as per the recommended replacement value.

'OPTION A' has been selected with the highest votes.

A: 14	B: 5	C: 5	Inv: 2

Invalid Vote Reasons

1 invalid vote(s) - No option selected

Mr Toh requested that alternative quotes be obtained upon renewal. The manager advised that previously, alternative insurers had been reluctant to provide cover, due to the number aluminium composite panels along with the cross laminated timber construction.

Mr Toh offered to pass suggestions onto the manager for alternative providers.

Authorised Representatives / Distributors

Munro Property is an Authorised Representative of Corporate Home Unit Underwriting Agencies Pty. Ltd and an Authorised Distributor of Strata Community Insurance Pty Ltd.

General Information

Landlords / Contents Insurance
Munro advises all owners that the Corporation's insurance does not cover the landlord or contents insurance. Each owner is responsible for ensuring that they have cover in place which suits their individual needs. The Corporation's policy also does not include public liability cover for individual units.

Insurance Claims
Owners are advised that any successful claim will attract an excess and will likely affect the premium upon renewal. If a claim is made because of lack of maintenance by the Corporation, the Corporation will be responsible for paying the excess. The owner will generally be responsible for the payment of the excess in all other instances.

Owners are advised that claims made against the Corporation's insurance policy associated with lack of maintenance or naturally occurring deterioration (wear and tear) may be refused by the insurer. The Corporation should ensure that regular repairs and maintenance should be planned and carried out to prevent damage to the common property.

Claims also associated with non-rectification of an insured property defect, error, or omission that you were aware of or should reasonably have been made aware of may also be refused by the insurer.

Owners are further advised that when making a claim against malicious damage, theft, arson etc. a Police Incident Report (PIR) number will be required by the insurer and the report should be made as soon as the insured is aware of the loss.

If owners are unsure as to what is required when making a claim, they are to refer to the insurer's Product Disclosure Statement (PDS).

ALTERATIONS, ADDITIONS & APPROVALS

No applications were submitted for consideration.

Owners are advised that Corporation approval may be required for certain things including (but not limited to) prescribed works, pets, and exclusive use of common property. Some approvals require the passing of a special or unanimous resolution and cannot be considered unless the exact wording of the proposal is included in the agenda.

"Prescribed work" in relation to a unit means:
(a) the erection, alteration, demolition or removal of a building;
(b) the alteration of the external appearance of a building.

If owners are unsure if Corporation approval is required, they are to contact Munro for further clarification.

COMMON PROPERTY MAINTENANCE

Lift Maintenance / Costs (Business Arising)

It is noted that the Corporation has a contract with Schindler Lifts (exp. 14 December 2028) for the maintenance of the lifts. It is further noted that Community Corporation No. 41145 Inc. ("SOHO"), and lots 1, 2 & 3 of Community Corporation No. 41144 Inc. (commercial premises) are exempt from contributing to these costs in accordance with bylaw 43, and the resolution passed at the 2023 Annual General Meeting. Special levies are to be raised against Community Corporation No. 41146 Inc. and lots 4, 5 & 6 of Community Corporation No. 41144 Inc. in accordance with lot entitlement.

Munro advises that the dual-SIM diallers have now been equipped to the lifts.

Anchor Point Certification & Window Cleaning (Business Arising)

The anchor points have now been certified, however it was discovered that the anchor points are fall arrestors only, meaning that they cannot be used for rope access. The management committee of the Primary Corporation are considering the possibility of installing rope access points as it is believed this will significantly reduce the cost of window cleaning (as the cleaners can abseil, rather than use EWPs).

Further Maintenance Items

The owner of lot 4 indicated they would like the rug in the foyer cleaned and the brown staining from the balcony run off removed. The strip of metal near the front sliding door has also come loose, and other metal strips in the atrium area. These items will be referred to the Primary Corporation committee.

Emergency Works

In the event of a property emergency, Munro is to be contacted in the first instance on 08 8132 2000. In the event of after-hours emergencies, the call will be directed to HPG Insurance & Maintenance Works. Please note that this service is above and beyond the standard service provided and will incur additional charges at an hourly rate.

If the works are not deemed an emergency or are determined to be the responsibility of the owner, costs will be passed to the owner for recovery.

GENERAL BUSINESS

GST Registration (Business Arising)

The Primary Corporation (CC 41143) has explored the registration of each Secondary Corporation for GST. The Primary Corporation is registered for GST and it was believed (as per advice on the Government ABN Lookup website) that the CC 41146 was also registered for GST. However, since the appointment of Moore Australia to manage the tax affairs of the Corporation, it was uncovered that the Corporation was de-registered some time ago.

Munro sought advice from Moore Australia, which provided an analysis of the potential benefits of GST registration for the Corporation. According to Moore Australia, registering the Corporation for GST would prevent any GST "spillage." Presently, the Corporation is charged GST due to the Primary Corporation's registration. By registering, the Corporation would be able to reclaim the GST paid.

It was further advised that registration is only cost-effective if the GST paid exceeds the cost of maintaining GST registration (e.g., BAS lodgement fees). Upon review, Munro advises that GST paid in the last quarter amounted to $4,414.01, while the cost of lodging a BAS is $165, making registration financially viable.

Members are reminded that corporations are required to pay additional GST when their revenue (i.e., collected levies) exceeds their expenses. However, as the Corporation is unlikely to generate more revenue than required—since the Primary Corporation covers most expenses—this should not pose a concern.

Given these considerations, it appears beneficial for the Corporation to register for GST.

To resolve that the Corporation re-registers for GST.

Passed by Simple Majority

Rubbish Collection (Business Arising)

The management committee of the Primary Corporation arranged a waste management plan, which was then submitted to the council for their consideration. This matter is still with the council.

Change of End of Financial Year

Resolved that the Corporation move its end of financial year from 30 November to 30 June.

Passed by Simple Majority

This result in minimal disruption to owners, aside from the AGM moving from January to August. This change aims to alleviate the time constraints posed by Christmas closures, allowing management and the committee more time to effectively prepare the agenda and budget.

Member Register

To ensure you receive all communications from the corporation, please provide Munro Property with a valid email address and notify them promptly of any changes to your contact information.

The members register is a confidential document and distribution of this register must comply with the *Privacy Act 1988*. Requests for access to other members' details should be directed in writing to the secretary of the Corporation. If you prefer not to have your details circulated to other owners, please inform Munro Property in writing.

Owners are reminded that correspondence and financial records are available for inspection by appointment during regular business hours at the offices of Munro Property.

BUDGET & CONTRIBUTIONS

Mr Toh requested that the Corporation's comparative financial statements be sent with future agendas.

Review & Acceptance of Administration Fund

Administration funds are collected to pay recurrent expenditure of the Corporation such as the contributions to the Primary Corporation..

Motion Withdrawn - That, in accordance with the *Community Titles Act 1996 Section 116,* that the proposed administration budget and consequently the annual contributions being $216,000.00 + GST be accepted.

Alternative Motion – Resolved that the quarterly contributions remain the same as the previous quarter to accommodate for the change in GST registration. This will be reviewed at the next Annual General Meeting scheduled for August 2025.

Passed by Simple Majority

Review & Acceptance of Sinking Fund

A community corporation requires a sinking fund under the *Community Titles Act 1996 Section 116 (3).* Non-recurrent expenditure must be made from the sinking fund and all other recurrent expenditure of the corporation must be made from the administrative fund.

Motion Withdrawn - That, in accordance with the *Community Titles Act 1996 Section 116,* that the proposed sinking fund budget and consequently the annual contributions being $470.00 + GST be accepted.

Alternative Motion – Resolved that the quarterly contributions remain the same as the previous quarter to accommodate for the change in GST registration. This will be reviewed at the next Annual General Meeting scheduled for August 2025.

Passed by Simple Majority

The sinking fund's purpose is not to offset recurrent expenditure of the Corporation (unless instructed so by the elected representatives) and is additional to the above administration budget.

Contributions

Both contributions are to be divided by lot entitlement and paid in quarterly instalments.

Forward Budget

In accordance with the *Community Titles Act 1996 Section 113(1aa)* and the *Community Titles Regulations 2001 Regulation 18A*, corporations that are 20+ lots, with improvements (including buildings or other structures) on the common property insured for $100,000 or more, must present a 5-year forward budget at each Annual General Meeting. This budget must include any proposed expenditure (other than ongoing costs) for a 5-year period.

Munro recommends the Corporation utilise the services of qualified asset surveyors to provide this report should one be required.

Motion Withdrawn - That that Munro act upon instructions given at the meeting.

Alternative Motion – Resolved to review at the August 2025 Annual General Meeting.

Passed by Simple Majority

UNPAID LEVIES POLICY

Approval of Debt Recovery Process for Arrears

Resolved as per the *Community Titles Act 1996 Section 114(8),* "a contribution, instalment or interest may be recovered as a debt", to adopt the revised policy of debt recovery, which is as follows:

- For levies unpaid 14 days after their due date, owner/s will receive a reminder letter and a text message (stage 1).
- For levies unpaid 60 days after their due date and greater than $50.00, the owner/s will receive a final notice outlining the cost associated with transferring the recovery to a lawyer and a text message (stage 2, cost $55.00).
- For levies unpaid 90 days after their due date and greater than $500.00, the owner/s will receive a notice outlining that the recovery of overdue levies will be transferred to a solicitors' office specialising in debt recovery (stage 3, cost $150.00).

Passed by Simple Majority

Munro is to be contacted if an owner is having difficulty paying on time, so fees are minimised or negotiated, interest charged may be waived if an adequate payment plan is maintained and adhered to.

Approval of Recovery of Debt Collection Fees

Defeated that all fees incurred by the Corporation associated with the debt recovery process (including, but not limited to, solicitors' fees and court costs) will be payable by the owner, recovered by the action and applied to the lot owner's account.

Defeated with one vote cast against.

Manager's Note: As per the *Community Titles Act 1996*, a unanimous resolution cannot pass if any votes are cast against it. Members are advised that as the motion has been defeated, it may hinder the Corporation's ability to recoup fees associated with debt recovery.

The Corporation may choose to apply for relief to the Magistrates Court under Section 142 of the *Community Titles Act 1996*. This matter will be referred to the management committee.

Interest Charged on Overdue Accounts

As per the *Community Titles Act 1996 Section 14(b),* the Corporation may "fix (in accordance with the regulations) interest payable in respect of a contribution, or an instalment of a contribution, that is in arrears."

Resolved that the interest rate of 15% per annum remains in place and be applied to owners who fall in arrears with their payments.

Passed by Simple Majority

APPOINTMENT OF PUBLIC OFFICER

Under the *Income Tax Assessment Act 1936,* a person is required to be nominated to act as public officer for the Corporation. An owner can fill this position however this can present issues should ownership of the lot change at any time.

Resolved that Mr Joshua Baldwin of Munro act as Public Officer as defined under the *Income Tax Assessment Act 1936*.

Passed by Simple Majority

ENGAGEMENT OF AUDITOR

Resolved as per the *Community Titles Act 1996 Section 138* that NRM Johnson be engaged to audit the annual statement of accounts.

NRM Johnson is a registered company auditor within the meaning of the *Corporations Act 2001* of the Commonwealth.

Passed by Simple Majority

NEXT MEETING DATE & MEETING CLOSURE

The date and time for the next Annual General Meeting under consultation with the management committee. There being no further business, the meeting was declared closed at 7:12 PM.

FORM F1 Orig. 1) **LF 12823783**

16:51 07-Nov-2017
14 of 14

LANDS TITLES REGISTRATION OFFICE

SOUTH AUSTRALIA

LODGEMENT FOR FILING UNDER THE COMMUNITY TITLES ACT 1996

FORM APPROVED BY THE REGISTRAR-GENERAL

BELOW THIS LINE FOR OFFICE PURPOSES ONLY

SERIES NO	PREFIX
143	LF

AGENT CODE

LODGED BY: : **LYNCH MEYER** **MSLM**

CORRECTION TO: **MSLM**

SUPPORTING DOCUMENTATION LODGED WITH INSTRUMENT (COPIES ONLY)

1

2

3

4

5

PICK-UP NO.	
CP	

CORRECTION	PASSED

FILED 13/11/17

REGISTRAR-GENERAL

PRIVACY COLLECTION STATEMENT: The information in this form is collected under statutory authority and is used for maintaining publicly searchable registers and indexes. It may also be used for authorised purposes in accordance with Government legislation and policy requirements.

© LAWSOFT PTY LTD (June 2016) Ref: 1710322

605484

COMMUNITY PLAN NO. C41146

COMMERCIAL AND RESIDENTIAL DEVELOPMENT

"VERDE"
COMMERCIAL AND RESIDENTIAL DEVELOPMENT
54-60 KING WILLIAM STREET, KENT TOWN

SECONDARY STRATA BY LAWS – RESIDENTIAL

Index

No		Page
1.	Interpretation and Definitions	4
2.	Administration Management and Control of Common Property	5
3.	Use and Enjoyment of the Common Property	6
4.	Use of Lots/Persons bound by these By-laws	7
5.	Variation of By-laws	7
6.	Development of Community Lots	7
7.	Noise	8
8.	Vehicles	8
9.	Obstruction	8
10.	Damage to Common Property	8
11.	Behaviour of Invitees	8
12.	Depositing Rubbish etc on Common Property	9
13.	Appearance of building	9
14.	Storage of Flammable Liquids etc	10
15.	Garbage disposal	11
16.	Keeping of animals	11
17.	Tenants to have notice of by-laws	12
18.	Observance of by-laws	12
19.	Lot to be kept clean	12
20.	Use of water etc	12
21.	Notice to be given	13
22.	Corporation may inspect	13
23.	Infectious diseases	13
24.	Unavoidable noise to be minimised	13
25.	Moving Articles	14

26. Committee may make rules 14

27. Lotholders not to instruct contractors/workmen 14

28. Use of lots - specific 14

29. Common Property - Special Privileges 15

30. Security 15

31. Corporation rights and powers - unpaid levies 16

32. Insurance 17

33. Severability 18

34. Offence 18

35. Penalty 18

36. Naming Rights and Signage Rights 18

37. Telecommunications Licence 19

38. Permits 19

39. Compensation to Corporation 20

40. No Trade or Business from Residential Lots 20

41. Building Warranties 20

42. Air Conditioning Equipment 21

43. Contributions by Owners 21

44. Retail/Commercial Lots 22

45. Caretakers Arrangements 22

Certified correctly by prepared in accordance with the requirements of the *Community Titles Act 1996* by the person who prepared the document

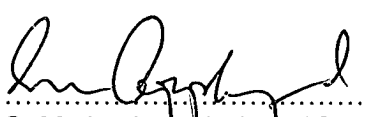

.....

S. M. Appleyard - Legal Practitioner
190 Flinders Street
Adelaide SA 5000

COMMUNITY TITLES ACT

Secondary Scheme By-Laws
Community Plan No. C41146

Part 1 - Preliminary

1. In these by-laws, unless the contrary intention appears:-

"*the Act*" - means the *Community Titles Act 1996*;

"*the Corporation*" means the Community Corporation No. C41146 Incorporated;

"*Corporation Manager*" means any party approved by the Corporation having the relevant expertise and experience to properly manage and perform the duties and functions of the corporation under the Act and Corporation Management Agreement means any such Agreement appointing the Corporation Manager pursuant to the Act;

"*develop*" includes:

(i) the construction or alteration of any building, structure, fence, wall or other external fixture or fitting;

(ii) any site works or landscaping;

(iii) any change to any improvement on the community lot;

and "*development*" has a corresponding meaning;

"*landscaping*" includes the provision and arrangement of trees, shrubs, ground covers, grassed areas, paving and similar site works;

"*improvement*" means any thing which has been done to the community lot by the development of the community lot;

"*motor vehicle*" includes motor cycle, caravan, boat and bicycle;

"*party wall*" includes the easement for support and shelter created under the Act;

"*visitors*" includes customers, invitees and clients of the owner or occupier of a community lot;

"*lot*" means a Community Lot comprised in Community Corporation Plan Number C41146, and includes a Strata Lot.

"*Lotholder*" means the owner of a lot and where the context allows the occupier of a lot.

"*Occupier*" of a lot includes, if the lot is unoccupied, the owner of the lot;

"*rules*" means the rules made by the Corporation pursuant to the powers contained in these by-laws;

a term defined in the Act has the same meaning when used in these by-laws unless the contrary intention appears.

a reference to any statute, regulation or Council by-law includes all amendments, consolidations or replacements of them;

one gender includes all the other genders;

the singular includes the plural and the other way around.

Part 2 - Mandatory By-laws

2. **Administration Management and Control of Common Property**

2.1. The Corporation is responsible for the tasks set out in the Act as the functions of the Corporation, and any additional functions given to it under these by-laws.

2.2. The Corporation is (in addition to its responsibilities under the Act) responsible for:

2.2.1. the repair, maintenance and planting of the landscaped areas of the Common Property;

2.2.2. the repair and maintenance of the driveway and car parking areas of the Common Property;

2.2.3. the repair, maintenance and replacement of any security lighting on the Common Property;

2.2.4. the repair, maintenance and replacement of any bitumen or paving bricks on the Common Property;

2.3. Any costs incurred by the corporation in fulfilling its functions under either or both the Act and these by-laws are recoverable from the owners of the Lots in proportion to the lot entitlement of each community lot.

2.4. In the administration, management and control of the Common Property, the corporation must ensure that these by-laws are adhered to by the persons that are bound by the by-laws. The Corporation has an obligation to enforce the by-laws for the benefit of the owners and occupiers of the Lots and for the benefit of the Corporation.

2.5. The Corporation may (but is not obliged to) establish a Management Committee ("the Committee") responsible to the Corporation for the administration, management and control of the Common Property.

2.6. The Corporation may appoint a manager to carry out, on behalf of the Corporation the function of administering, managing and controlling the Common Property.

2.7. The manager shall be appointed on a contract that is subject to annual review by the Corporation.

2.8. If on annual review the Corporation is dissatisfied with the Manager's performance the Corporation may determine the Management Contract.

3. Use and Enjoyment of the Common Property

3.1. The Common Property is, subject to the Act and these by-laws for the common use and enjoyment of owners and occupiers in the community scheme and their visitors.

3.2. A person bound by these by-laws:

3.2.1. must not obstruct the lawful use of the Common Property by any person;

3.2.2. must not use the common property in a manner that unreasonably interferes with the use and enjoyment of the Common Property by the other persons bound by these by-laws or their visitors;

3.2.3. must not make, or allow that person's visitors to make, undue noise in or about the Common Property;

3.2.4. must not interfere, or allow that person's visitors to interfere, with other people in the enjoyment of their rights in relation to the Common Property;

3.2.5. must not park a motor vehicle in a parking space allocated for others on the Common Property, or alternatively, on a part of the Common Property on which parking is not authorised by the Corporation;

3.2.6. must take reasonable steps to ensure that their visitors do not park a motor vehicle in parking spaces allocated for others on the Common Property or on parts of the Common Property on which parking is not authorised by the Corporation;

3.2.7. must not repair motor vehicles on the Common Property;

3.2.8. must not drive a motor vehicle at a speed of greater than 10 km/hour on the Common Property;

3.2.9. must not damage or interfere with any landscaping on the Common Property;

3.2.10. must not use any portion of the Common Property for that person's garden;

3.2.11. must not display any sign, or any other conspicuous material of a similar nature on any part of the Common Property;

3.2.12. must not leave or store any items on the common property.

3.3. The Corporation may by ordinary resolution (unless the Act requires otherwise) approve the use of the Common Property in a manner inconsistent with these by-laws.

4. Use of Lots/Persons bound by these By-laws

4.1. Subject to the Act any other relevant legislation and these by-laws a person bound by these by-laws must not use a lot for a purpose unless the use is consistent with the Scheme Description, the By-laws and the use has been otherwise approved by the Corporation.

4.2. The following persons are bound by these By-laws:-

4.2.1. the Corporation;

4.2.2. the Lotholders and occupiers of the Community Lots comprising the Community Scheme;

4.2.3. persons entering the Community Parcel.

5. Variation of By-laws

5.1. These by-laws come into operation when the plan of community division is deposited in the Land Titles Registration Office.

5.2. These by-laws continue until varied or cancelled as provided for in the Act.

Part 3 - General Provisions

6. Development of Community Lots

6.1. The following by-laws regulate any future development on the community lots, and the word "*developer*" means any person who conducts any development on the community lot.

6.2. The developer must not develop a community lot unless the development complies with the requirements of these by-laws.

6.3. Any further development of any community lot which involves the alteration or destruction of a party wall requires the prior written consent of any person with registered party wall rights.

6.4. The developer must only develop the community lot for a purpose allowed under the relevant development plan under the *Development Act 1993*.

6.5. The Corporation may by prior special resolution approve any development which would otherwise be in breach of these by-laws.

6.6. The scheme description lodged with these by-laws contemplates a secondary division of Primary Lot 1003 to create forty seven (47) Secondary residential premises and common property.

6.7. The Corporation will do all acts, matters and things and grant such approvals as may be required, to give effect to the intent of the scheme description and this by-law is authority for the Corporation to do so.

6.8. Primary Lot 1003 as divided by secondary division may be used only for residential purposes.

7. **Noise**

A person bound by these by-laws shall not create any noise on the Community parcel likely to interfere with the peaceful enjoyment of a Lot holder or occupier of another lot or of any person lawfully using Common Property.

8. **Vehicles**

In addition to any other power, authority, duty or function imposed or conferred on the Corporation, it shall have the power to tow away any motor vehicle parked or standing in contravention of these by-laws at the expense of the person whose act or default has caused the contravention and that person shall indemnify the Corporation for all costs and damages arising out of such actions.

9. **Obstruction**

A person bound by these by-laws must not obstruct lawful use of Common Property by any person.

10. **Damage to Common Property**

A person bound by these by-laws must not mark, paint drive nails or screws or the like into, or otherwise damage or deface, any structure that forms part of the improvements on the Community Parcel, or Common Property except with the consent of the Corporation.

11. **Behaviour of Invitees**

11.1. A person bound by these by-laws shall take all reasonable steps to ensure that his invitees do not behave in a manner likely to interfere with the peaceful enjoyment of another Lotholder or occupier or of any person lawfully using Common Property.

11.2. A person bound by these by-laws shall be liable to compensate the Corporation in respect of all damage to the Common Property or personal property vested in it caused by such person.

11.3. The owner of a lot which is the subject of a lease or licence agreement shall take all reasonable steps, including any action available to that owner under any such lease or licence agreement, to ensure that any lessee or licensee or other occupier of the lot or their invitees comply with the provisions of the by-laws.

11.4. The duties and obligations imposed by these by-laws on a Lotholder or occupier of a lot must be observed not only by the Lotholder or occupier and also by their guests, servants, employees, agents, children, invitees and licensees of such Lotholder or occupier.

12. Depositing Rubbish etc on Common Property

12.1. A person bound by these by-laws must not deposit or throw upon the Common Property any rubbish, dirt, dust or other material likely to interfere with the peaceful enjoyment of the Lotholder or occupier of another lot or of any person lawfully using the Common Property.

12.2. A person bound by these by-laws must not throw or allow to fall or permit or suffer to be thrown or to fall any paper, rubbish, refuse, cigarette butts or other substance whatsoever out of the windows or doors or down staircases, from balconies, from the roof or in the passageways of any building on the Community Parcel. Any damage or costs for cleaning or repair caused by breach hereof shall be borne by the Lotholder or occupier.

12.3. A person bound by these by-laws must segregate and place all rubbish in the Recycled or General:

12.3.1. waste bins (provided by the Corporation) at Level 1; or

12.3.2. in the waste bins via the Recycled or General chutes provided for Levels 2-5.

13. Appearance of building

13.1. A person bound by these by-laws must not, except with the consent in writing of the Corporation:

13.1.1. hang any washing, towel, bedding, clothing or other article or display any sign, advertisement, placard, banner, pamphlet or like matter on any part of his lot in such a way as to be visible from outside any building on a lot;

13.1.2. place other than outdoor settings, chairs, barbeque (no charcoal or bottled gas) and plants on any balcony or verandah of a lot.

13.2. A Lotholder or occupier must not:-

13.2.1. erect or affix any curtains, blinds, or awnings to the inside or outside of his lot or the building;

13.2.2. affix any fittings to exterior walls or ceilings of his lot or the building;

without the prior written consent of the Corporation and must comply with the directions and requirements of the Corporation, including without limitation, style and colour of window treatments.

Blinds, awnings and curtain backing to outside windows visible from the streetscape must be in a neutral shade of off white/ivory to maintain uniform visual amenity to the streetscape.

13.3. For avoidance of doubt the Developer proposes to procure, at the first meeting of the Corporation, a resolution affirming the Developer's nominated specification of window treatments (outside colour), balcony barbecues,

balcony tables, balcony chairs, pots and pot plants which Lotholders or occupiers are entitled to install or place on or in a Lot or subsidiary, to maintain uniform visual amenity from the streetscape. Outside wireless, two-way radio and television aerials or satellite receivers must not be erected without the prior written permission of the Corporation.

13.4. No structural alteration shall be made to any lot (including any alterations to gas, water supply, plumbing or electrical installations and including the installation of any air conditioning system) without the prior written permission of the Corporation.

13.5. A Lotholder or occupier must not paint or affix any advertisements, placards, banners, pamphlets, notices or posters to or on any part of the exterior of his lot nor do anything to vary the external appearance of his lot or the building without the prior written consent of the Corporation **PROVIDED ALWAYS** that whilst the owner of a lot at plan deposit (developer) remains owner of more than one lot it or its respective servants and/or agents may without the consent of the Corporation paint or affix any signs advertisements notice or notices or posters to or on any part of the premises for the purposes of offering for sale or lease any lot.

13.6. This clause 13 does not preclude the Lotholder or occupier from displaying signs or signage used in the normal course of its business, subject to:

13.6.1. conformity with the Developers themes (size, colour);

13.6.2. obtaining all necessary approvals from a relevant development authority; and

13.6.3. any requirements of the primary By Laws.

13.7. The Corporation shall at regular intervals paint and maintain the exterior facade of any building in colours and to a standard commensurate with the development and keep the Common Property in a state of good and serviceable repair and properly maintain all chattels, fixtures and fittings (including walkways, stairways, lifts, handrails, intercoms and security equipment (if any)) held by the Corporation or used in connection with the Common Property or its enjoyment by Lotholders or occupiers and visitors and for this purpose enter into an appropriate contract or contracts with third parties for such parties to provide those services for the benefit of Lotholders on behalf of the Corporation.

14. Storage of Flammable Liquids etc.

14.1. A Lotholder must not, except with the consent in writing of the Corporation, use or store on a lot or on the Common Property any flammable chemical, liquid or gas or other flammable material, other than chemicals, liquids, gases or other material used or intended to be used for domestic purposes, or any such chemical, liquid, gas or other material in a fuel tank of a motor vehicle or internal combustion engine or domestic cleaning chemicals.

14.2. A Lotholder or occupier must not bring to, do or keep anything in his lot which will increase the rate of fire insurance on any building or any property on a lot

or which may conflict with the laws and/or regulations relating to fires or any insurance policy upon the building or any property on the Community Parcel or the regulations or ordinances of any public authority for the time being in force.

14.3. If a Lotholder or occupier does or permits to be done any act matter or thing which has the effect of invalidating or avoiding any policy of insurance taken out by the Corporation then such Proprietor or Occupier shall be responsible for any damage or loss which the Corporation or any other Lotholder may suffer or incur as a result thereof.

14.4. If the Corporation consents to a Lotholder or occupier bringing to doing or keeping anything in his lot which increases the rate of fire insurance on any building or on any property on a lot, such Lotholder or occupier must pay the amount of any increased premium to the Corporation upon demand.

15. Garbage disposal

15.1. A Lotholder or occupier of a lot must:-

15.1.1. save where the Corporation provides some other means of disposal of garbage, (which other means of disposal will be adhered to by the Lotholder or occupier) maintain within his lot, or on such part of the Common Property as may be authorised by the Corporation, in clean and dry condition and adequately covered, a receptacle(s) for garbage;

15.1.2. comply with all local authority by-laws and ordinances relating to the disposal of garbage;

15.1.3. ensure that the health, hygiene and comfort of the Lotholder or occupier of any other lot is not adversely affected by his disposal of garbage.

15.2. Garbage receptacles shall be placed only where approved by the Corporation and used only for the purpose for which they are provided:

15.2.1. Empty bottles, boxes, used containers and similar items shall be placed in Recycled and General waste chutes, and/or Recycled and General waste bins provided by the Corporation;

15.2.2. The car parking areas shall be kept tidy and free of all litter.

16. Keeping of animals

16.1. A person bound by these by-laws must not keep an animal (without the prior written consent of the Community Corporation), in or in the vicinity of a lot but this by-law 16 does not:-

16.1.1. prevent an occupier of or visitor to a lot who suffers from a disability from keeping a "relevant animal" (as defined in the Act) in or in the vicinity of a lot or common property, if trained to assist the occupier in respect of that disability;

16.2. Where a person bound by these by-laws (with the consent of the Corporation or pursuant to clause 16.1.1) brings or keeps an animal on a lot or any other part of the common property that person is:-

16.2.1. liable to the proprietors or occupiers of all other lots comprised in the Plan of Community Division, and all other persons lawfully on the common property for any act or noise which is disturbing to an extent which is unreasonable, and for damage to, or loss of property or injury to any person caused by the animal; and

16.2.2. responsible for cleaning up after the animal has fouled any part of another lot or any part of the common property.

17. **Tenants to have notice of by-laws**

A copy of these By-laws (or a precis thereof approved by the Committee) shall be delivered to the Lessee or occupier of any lot not personally occupied by the Lotholder and in any event incorporated as an annexure to any Lease or Licence granted to a Lessee or occupier.

18. **Observance of by-laws**

The duties and obligations imposed by these By-laws on a Lotholder must be observed by the Lot holder and the Lot holder's occupiers, tenants, guests, servants, employees, agents, children, invitees and licensees.

19. **Lot to be kept clean**

Each Lotholder or occupier shall:-

19.1. keep his lot clean and take all practicable steps to prevent infestation by vermin and/or insects;

19.2. keep his windows in a thorough state of cleanliness and promptly notify the Corporation for their replacement with new glass of the same kind and weight as at present if broken or cracked;

19.3. not install or provide any window tinting to any external window of his lot;

19.4. be responsible for the interior cleanliness, maintenance and decoration of his lot, including balcony and courtyard glass and balcony balustrade rails even though that may be classified as common property;

19.5. take every reasonable precaution to prevent water overflowing on any other Lot, Subsidiary or common property when cleaning a balcony area or watering plants on a balcony.

20. **Use of water etc**

20.1. A Lotholder or occupier must not waste the water and shall see that all water taps in his lot are promptly turned off after use.

20.2. The water closets, conveniences and other water apparatus including waste pipes and drains must not be used for any purposes other than those for which they were constructed and no sweepings or rubbish or other unsuitable substance shall be deposited therein. Any damage or blockage resulting to such water closets, conveniences, water apparatus, waste pipes and drains from misuse or negligence shall be borne by the Lotholder whether the same is caused by his own actions, or those of his tenants, servants, agents, guest, employees, invitees, or licensees.

20.3. The Corporation may advise SA Water that all water charges will be billed directly to the Lotholder by SA Water in accordance with Lot entitlements.

21. **Notice to be given**

A Lotholder or occupier must give the Corporation prompt notice of any accident to or defect in the water pipes, gas pipes, electric installations or fixtures which comes to his knowledge and the Corporation shall have authority by its agents or servants in the circumstances having regard to the urgency involved to examine or make such repairs or renovations as they may deem necessary for the safety and preservation of the said building as often as may be necessary.

22. **Corporation may inspect**

22.1. Subject to giving reasonable written notice (without notice in the case of emergency) the Corporation and its servants, agents and contractors shall be permitted to inspect the interior of any lot and to test any electrical, gas or water installation or equipment therein and to trace and repair any leakage or defect in the said installation or equipment (at the expense of the Lotholder in cases where such leakage or defect is due to any act or default of the said Lotholder or his tenants, guests, servants, agents, employees, invitees or licensees). If not so permitted they may effect an entry. The Corporation, in exercising this power, shall ensure that its servants, agents and employees cause as little inconvenience to the Lotholder or occupier as is reasonable in the circumstances.

22.2. All doors and windows to the premises shall be securely fastened on all occasions when any premises are left unoccupied and the Corporation reserves the right to enter and fasten the same if left insecurely fastened.

23. **Infectious diseases**

In the event of any infectious disease which may require notification by virtue of any Statute, Regulation or Ordinances affecting any person in any lot the Lotholder or occupier of such lot must give or cause to be given written notice thereof and any other information which may be required relative thereto to the Corporation and shall pay to the Corporation the expenses of disinfecting the lot and building and replacing any articles or things the destruction of which may be rendered necessary by such disease.

24. **Unavoidable noise to be minimised**

In the event of any unavoidable noise in a lot at any time the Lotholder or occupier thereof must take all practical means to minimise annoyance to other occupants by

closing all doors, windows and curtains of his lot and also such further steps as may be within his power for the same purpose.

25. **Moving Articles**

The Lot Holder or Occupier must comply with and observe the following conditions and restrictions for delivery or movement of goods or furniture to and from a Lot:

25.1. goods or furniture may be delivered by appointment with the caretaker and to and from the Lot only through such entrances (Southern side via Little Rundle Street and using Service Lane on Western side – "3 tonne" truck limit) at such times and in such manner as will ensure minimum interference with persons using the entrances or Common Property and will be subject to the prior approval of and under the supervision of the Corporation;

25.2. goods or furniture being moved to or from a Lot shall only be carried in the lift installed in the Building (if any) designated for the purpose of carrying goods or furniture (the "**Goods Lift**") but in carrying the goods or furniture in the Goods Lift priority shall at all times be given to passenger traffic;

25.3. before goods or furniture are carried in the Goods Lift the sides of the Goods Lift shall be covered in such manner as the Corporation directs to prevent scratching or damage;

25.4. goods or furniture must not be left on the Common Property at any time and if so left may be removed by the Corporation at the expense and risk of the Lot Holder; and

25.5. appropriate measures must be taken to ensure that the security of the Building is maintained at all times while goods or furniture are being delivered to or removed from the Building.

26. **Committee may make rules**

Subject to the Act, the Corporation or its appointed manager may make rules relating to the Common Property not inconsistent with these by-laws and the same shall be observed by the Lotholders and their tenants, servants, agents, guests, employees, invitees or licensees unless and until they are disallowed or revoked by a majority resolution at a general meeting of the Lotholders.

27. **Lotholders not to instruct contractors/workmen**

Lotholders must not directly instruct any contractors or workmen employed by the Corporation unless so authorised, and all requests for consideration of any particular matter to be referred to the Corporation shall be directed to the Secretary or Corporation Manager and not to the Presiding Officer or any member of the Corporation.

28. **Use of lots - specific**

Subject to the provisions of these by-laws, the Scheme Description and the Development Plan for the Corporation of the City of Norwood, Payneham and St Peters and any other relevant Statutory enactments:

28.1. Retail and Commercial Lots are presently intended to be configured respectively as six (6) commercial/retail lots, with intended uses including but not limited to offices, professional rooms, licensed restaurants, bistros/coffee shops, gift shops, staff facilities, staff room, foyer, storage (including garbage storage), waiting and reception purposes, management, the letting of lots in the Building, the rendering of services to occupants of lots and other commercial and retail business purposes approved by a relevant development authority.

28.2. Other than uses specified in Clauses 28.1 a Lotholder or occupier is prohibited from leasing or granting rights of occupation in respect of a Lot for valuable consideration for a period of less than two (2) months.

28.3. Secondary SOHO lots, as discrete from and with separate access from adjoining street frontage are at their election entitled to use a Lot for such as "Air BNB", subject to any relevant development authority approval if required.

This clause 28 does not preclude a Lotholder entering into a Lease, Licence or Management Agreement on normal commercial terms for use of that lot in accordance with a use authorized by a relevant development authority.

29. **Common property - Special privileges (See Clauses 37 and 38)**

29.1. With the written consent of the original proprietor which is hereby acknowledged the Corporation may confer special privileges in respect of the common property to use the same in connection with such business operations lawfully carried out in accordance with relevant development authority approval in respect of the primary lots (whether divided by secondary division or not) and without limiting the generality of the foregoing the uses contemplated in clause 28, but the Corporation shall continue to be responsible for carrying out its duties pursuant to the Act in respect of the common property generally.

29.2. This clause 29 may not be changed except by unanimous resolution.

30. **Security**

30.1. The corporation may take all reasonable steps to ensure the security of the Community Parcel and property of the Corporation and the observance of these by-laws and without limiting the generality of the foregoing, may:-

30.1.1. close off any part of the Common Property not required for ingress or egress to a lot or a parking space on either a temporary or permanent basis or otherwise restrict the access to or use by Lotholders or occupiers of any such part of the Common Property;

30.1.2. permit any designated part of the Common Property to be used by any security person, firm or company to the exclusion of Lotholders or occupiers generally as a means of monitoring the security and general safety of the Community Parcel; and

30.1.3. obtain, install and maintain any locks, alarms, communication system or any other security device.

30.2. If the Corporation in the exercise of any of its powers under these by-laws restricts the access of Lotholders or occupiers to any part of the Common Property by means of any lock or similar security device it may make such number of keys or operating systems (if any) as it determines available to Lotholders free of charge and thereafter may at its discretion make additional numbers thereof available to Lotholders upon payment of a reasonable charge as may be determined from time to time by the Corporation.

30.3. The Lotholder of a Lot to whom any key or any operating system is given pursuant to these by-laws shall exercise a high degree of caution and responsibility in making the same available for use by any occupier of a lot and shall take reasonable precautions (which shall include an appropriate covenant in any lease or licence of a lot to any such occupier) to ensure the return thereof to the Lotholder or the corporation upon the occupier ceasing to be an occupier.

30.4. A Lotholder or occupier of a lot into whose possession any key or operating system referred to in these by-laws has come shall not without the prior written approval of the Corporation duplicate the same or cause or permit the same to be duplicated and shall take all reasonable precautions to ensure that the same is not lost or handed to any person other than another Lotholder or occupier and is not disposed of otherwise than by returning it to the Corporation.

30.5. A Lotholder or occupier of a lot who is issued with a key or operating system referred to in these by-laws shall immediately notify the Corporation if the same is lost or misplaced.

31. **Corporations rights and powers - unpaid levies**

31.1. A Lotholder (which expression shall extend to a corporation and a mortgagee in possession) must pay on demand:-

31.1.1. the whole of the Corporation's costs and expenses (including Solicitors and own client costs) incurred in recovering levies or moneys duly levied upon that Lotholder's Lot in the Plan by the Corporation pursuant to the Act or pursuant to the by-laws of the Corporation;

31.1.2. such costs as may have been ordered to be paid by the Lotholder to the Corporation by any Court Tribunal or body with authority to order the payment of costs.

31.2. In the event that the Lotholder fails to attend to the payment of such costs and expenses after demand is made for the payment of same, the Corporation may take action for the recovery of same in any Court of competent jurisdiction with the proviso that, in respect of the Corporation's party and party costs, the Corporation shall comply with any procedure for the taxation and recovery of costs provided for in the rules of the Court, Tribunal or other body which orders payment in costs in favour of the Corporation. The Corporation may also enter any costs payable to it as referred to in paragraphs 31.1 above against the levy account of the Lotholder's Lot in the Plan and note the

amount of such costs on any certificate issued in respect of the Lot pursuant to the *Real Property Act*.

31.3. If a contribution levied under the Act is unpaid 30 days after it falls due for payment, then the amount of the unpaid contribution will bear interest thereafter at an annual rate as determined by the Corporation from time to time, unless otherwise determined by Ordinary Resolution at a general meeting. At the discretion of the Committee, any Corporation Manager has administrative discretion to write off interest at a limit to be determined by the Corporation from time to time.

31.4. If at the time a person becomes the Lotholder of a lot, another person is liable in respect of the lot to pay interest on a contribution, the Lotholder is jointly and severally liable with the other person for the payment of the interest.

31.5. The amount of any interest is recoverable by the Corporation as a liquidated debt.

31.6. Where the Corporation expends money to make good damage caused by a breach of the Act, or of these by-laws by any Lotholder or the tenants, occupiers, guests, servants, employees, agents, children, invitees or licensees of the Proprietor or any of the them the Corporation shall be entitled to recover the amount so expended as debt in an action in any Court of competent jurisdiction from the Proprietor of the lot at the time when the breach occurred.

32. **Insurance**

The Corporation must affect all insurance required to be effected by a community corporation pursuant to the Act. The costs of arranging Insurance(s) in terms of this By-law are to be recovered from the owners of the Lots proportionate to their Lot entitlements.

32.1. The Community Corporation must review, on an annual basis:-

32.1.1. all insurance effected by it; and

32.1.2. the need for new or additional insurances.

32.2. Notice of an Annual General Meeting must include a form of motion to decide whether insurance(s) effected by the Community Corporation should be confirmed, varied or extended; and

32.3. The Community Corporation must immediately effect new insurances or vary or extend insurances if there is an increase in risk or a new risk to Common Property or the Community Corporation.

32.4. A Lotholder or occupier must not do anything that might:-

32.4.1. void or prejudice insurance effected by the Community Corporation; or

32.4.2. increase any insurance premium payable by the Community Corporation.

32.5. A retail or commercial lotholder shall carry its own third party property and bodily insurance on the retail lot extending to cover any person occupying the lotholder's retail lot.

32.6. The policy of insurance to be carried by the retail lotholder must be issued by a company approved by the Corporation and must give such cover as the Corporation in its absolute discretion may require, the minimum requirements being that such a policy of insurance must give cover for loss or damage to property or person of third parties to a minimum of $20 million in respect of any one accident or event.

32.7. Proof of coverage by way of a copy of the retail or commercial lotholder's current receipt of insurance schedule must be supplied to the Corporation on request.

33. **Severability**

If any by-law or any part of these by-laws cannot be given effect or full force and effect by reason of statutory invalidity or otherwise such by-law or part by-law as the case may be which cannot be given effect or its full force and effect shall be severed, ignored or read down restrictively but so as to maintain and uphold as far as possible the remaining by-laws.

34. **Offence**

Any person who contravenes or fails to comply with the provisions contained in these by-laws or Rules is guilty of an offence.

35. **Penalty**

The maximum penalty for the breach of any of these by-laws or the Rules is such amount as may from time to time be prescribed by the Act presently:

- used for business or commercial purposes - $2,000.00
- any other case - $500.00.

36. **Naming Rights and Signage Rights**

The owner from time to time of Secondary Strata Lot 1 in C41144 (the Retail Store) shall be entitled for no licence fee to have the following rights:

36.1. the sole and exclusive right to determine the name of the building including the right to grant to such other parties as that owner shall determine in its absolute discretion naming rights in respect of the Building; and

36.2. the sole and exclusive right to grant to owners or Occupiers of the Building or third parties the right to erect signage on the Common Property including without limitation the roof and appropriate locations on the external walls forming part of the Common Property. In exercising its rights pursuant to this By-Law the owner must comply with the provisions of By-Law 13.6.2 (approvals), provided that the owner shall not be obliged to comply with the other provisions of By-Law 6;

36.3. the owner of the Retail Store shall be solely responsible for any costs and expenses incurred in respect of that portion of the Common Property upon which signage is erected pursuant to this By-law including all costs of repair and maintenance together with all costs incurred in respect of electricity supplied to any such signage.

37. **Telecommunications Licence**

The owner from time to time of the Retail Store shall be entitled for no licence fee to have the following rights:

37.1. the sole and exclusive right to install and maintain on that portion of the Common Property comprising the roof such telecommunications equipment as the owner shall in its absolute discretion determine including without limitation antennas, receivers, radio transmitters and associated cabling;

37.2. the sole and exclusive right to grant to owners or Occupiers of the Building or third parties the right to place telecommunications equipment on those portions of the Common Property comprising the roof. In exercising its rights pursuant to this by-law the owner must comply with the provisions of by-law 13.6.2 (approvals), provided that the owner shall not be obliged to comply with the other provisions of by-law 6; and

37.3. the owner of the Retail Store shall be solely responsible for any costs and expenses incurred in respect of those portions of the Common Property upon which any equipment is erected pursuant to this By-law including all costs of repair and maintenance together with all costs in respect of electricity supplied to that equipment.

38. **Permits**

38.1. In any By-Law of the Corporation, unless the contrary intention is clearly indicated, the words "the consent of the Corporation" means the permission of the Corporation given in the form of a written permit.

38.2. The Corporation shall have the power to grant permits in respect of any activity in or on the Community Parcel.

38.3. The Corporation may attach such conditions to a permit as it thinks fit and may vary or revoke such conditions or impose new conditions by notice in writing to the permit holder.

38.4. The Corporation may grant a permit either for a term of up to twelve (12) months or for an identified activity or schedule of activities as it thinks appropriate.

38.5. A permit holder shall comply with each and every condition of the permit.

Each event which is a breach of the permit shall constitute a separate offence under these By-Laws.

38.6. A permit holder shall pay to the Corporation in advance, such fee as may be determined by the Corporation for the Corporation issuing the permit to the permit holder.

38.7. Subject to the terms of the permit, the Corporation may cancel, suspend or revoke the permit at any time by notice in writing to the permit holder.

39. Compensation to Corporation

39.1. The proprietor or Occupier of a Lot shall compensate the Corporation in respect of any damage to the Common Property or personal property vested in the Corporation caused by that proprietor or Occupier or their respective tenants, licensees or invitees.

39.2. In circumstances where the Corporation arranges for a service call to the Community Parcel and the reason for that service call relates to a particular lot or lots or is necessitated by reason of an act or omission of an owner or Occupier then the Corporation shall be entitled to recover the costs incurred in respect of such service call directly from the relevant owner or Occupier.

40. No Trade or Business From Residential Lots

40.1. The owner or Occupier of a Residential Lot must not use that Lot or any part of the Common Property for any trade or business including the sale or offering for sale of any goods or merchandise nor permit others to do so.

40.2. The Owner or Occupier of the Retail/Commercial Lots may carry on a trade or business from the relevant Lot, provided:

40.2.1. the development plan governing the use of that Lot permits the trade or business to be carried on from that Lot;

40.2.2. any requirements in respect of the trade or business stipulated by any relevant authority from time to time are complied with;

40.2.3. the trade or business can be carried on and is carried on without causing undue nuisance to the proprietors and Occupiers of other Lots; and

40.2.4. in respect of Retail/Commercial Lots the trade or business must not be undertaken outside the hours of 7.00 a.m. to 10.30 p.m. Sunday-Thursday and 7.00 a.m. to 11.30 p.m. on Friday and Saturdays and Public Holidays (subject to review and confirmation).

41. Building Warranties

The Corporation will, if the Developer is able to procure the Builder so to do, enter into a Deed with the Builder pursuant to which Deed the Builder will provide to the Corporation warranties in form similar to the statutory warranties contained in Section 32(2) of the Building Work Contractors Act 1995 with intent that the Corporation may directly enforce a breach of those warranties by the Builder. The Deed will incorporate the warranties contained in section 32(2) of the Building Work Contractors

Act 1995 and otherwise be in a form reasonably satisfactory to the Corporation the Builder and the Developer.

42. Air Conditioning Equipment

42.1. All air conditioning equipment including condensers which provide air conditioning services exclusively to individual Lots will be situated on the Primary Common Property.

42.2. In the event that any air conditioning equipment referred to in By-Law 42.1 or any part thereof including any condenser is situated on the Common Property then the owner of that equipment will have an easement appurtenant to the owner's Lot over the Common Property by virtue of the operation of Section 24(1)(c)(i) of the Act.

43. Contributions by Owners

43.1. In determining the financial contribution to be levied against Lotholders, the Corporation must have regard to the benefit derived by the Lotholders in respect of the relevant expenditure for which the contribution is to be levied.

43.2. Without limiting the provision of the By-Law 43.1:

43.2.1. Lotholders will not be required to contribute towards costs and expenses incurred in respect of any common property to which a Lotholder does not have access or in respect of common property including infrastructure and plant and equipment which does not service the Lotholders Lot.

43.2.2. By way of example - the Lotholders and occupiers of the secondary "Retail/Commercial" and "SOHO" Lots shall not without the consent of the Corporation be entitled to access any part of the building other than the relevant Retail/Commercial Lot and SOHO of which they are the owner or Occupier any common property forming part of the Retail/Commercial and SOHO lots secondary scheme (i.e., lift access restriction to Levels 3, 4 and 5).

43.3. The Corporation authorizes and directs the body corporate manager to apply this clause in respect of an appropriate adjustment and determination of contributions and sinking fund levies, other than in accordance with the schedule of lot entitlements, pursuant to section 114 (3) of the Act.

44. Retail/Commercial Lots

44.1. This By-Law shall apply only to the Retail/Commercial Lots.

44.2. A grease arrestor to the extent that one is required in respect of a Retail/Commercial Lot can only be located either:

44.2.1. in that portion of the common property in the basement of the Building marked "Grease Arrestor Tank" ("Grease Arrestor Tank"); or

44.2.2. in such other part of the Common Property as the Corporation shall approve.

44.2.3. The Corporation must allow the connection and installation by the Developer or an Owner or Occupier of a Retail/Commercial Lot of a grease arrestor in the area marked "Grease Arrestor Tank" and must not unreasonably withhold its consent to the installation of a grease arrestor pursuant to By-law 44.2.2 and must further permit the installation and connection of all plumbing from the grease arrestor in the Grease Arrestor Tank or such other approved area to the relevant Community Lot.

45. Caretaker Arrangements

45.1. The Developer will appoint a resident caretaker ("Caretaker") (owner/builder associated with the Developer) to carry out and effect maintenance repairs and "janitor" services for and to the Common Property pursuant to a formal contractual agreement on reasonable terms determined by the Developer ("Caretaker Agreement"),

45.1.1. from Plan Deposit for a period of 3 months, at its cost

45.1.2. thereafter at the cost of the Corporation;

and may require the Corporation to enter into a Caretaker Agreement with the Caretaker (as a direct agreement or as an assignment), and a Lotholder and the Corporation shall do all things reasonably necessary to give effect to the intent of this clause.

Handbook for Residents

La Verde Apartments 56-60 King William Street, KENT TOWN SA 5067

Community Corporation Nos. 41146 Inc.

Contents

Contents 2

Welcome 3

- Introduction 3
- History of La Verde 3

Contact Information 4

Emergencies 4

- Emergency Repairs / Maintenance 4
- Note on Locking Oneself Out 4

Policies & Procedures 4

- Moving In or Out 4
- Noise 6
- Balconies 7
- Pets 7
- Carparks 8

Maintenance & Services 8

- Maintenance Requests 8
- Cleaning & Caretaking 9
- Waste Disposal 9
  - Bin Collection Days 10

Safety & Security 10

- Entry Fobs 10
- Gate Remotes 10
- Apartment Keys 10

Service Infrastructure 11

- Fire Safety 11
- Lift Maintenance & Repairs 11

Welcome

Introduction

Welcome to La Verde, a vibrant residential community near the centre of all the inner-city action, with shops, bars and restaurants, museums, art galleries and entertainment venues and the Botanic Garden all right at your doorstep.

This is a guide to ensure continued harmony within the community title and to provide a friendly, respectful, and welcoming environment for all residents.

Compliance with this information booklet will ensure that living at this residential complex is a pleasant experience.

The information in the handbook is based on policies made by the management committee and members, as well as extracts from the Corporation's bylaws.

Persons bound by the bylaws include all owners, residents, their invitees or guests, employees, contractors, agents, and employees.

If any person should breach the bylaws, a fine of up to $500 may be imposed on and payable by the lot (apartment) owner. Should you require a copy of the bylaws, please contact the body corporate manager (see 'Contacts').

History of La Verde

In the Adelaide city fringe suburb of Kent Town, La Verde became the state's first apartment project using an innovative timber construction technique built by local building company Morgan and Hansen.

La Verde has 54 apartments, 7 SOHO apartments, ground-floor retail and commercial offices.

The building is unique not only in the materials used but also because of the harmonious common areas for residents such as a central piazza.

Contact

Body Corporate Manager
Munro Property
P: 08 8132 2000
E: corporations@munroproperty.com.au

SAPOL
Emergency: 000
Non-Emergency: 131 444

Clean All Services
Larissa: 0431 520 060 (Mon, Wed, Fri 7 AM -3 PM)

Emergencies

In the event of a medical emergency, fire, or urgent police attendance, please call **000** in the first instance.

Emergency Repairs / Maintenance

Please be advised that repairs and maintenance that are not the Corporation's responsibility are the responsibility of the owner (i.e. leaking tap, broken window, etc.).

In the event of an urgent repair, please call Munro Property on 08 8132 2000. If the call is made afterhours, it will be diverted to HPG Insurance & Maintenance Works who have been have information and instructions specific to La Verde.

Note on Locking Oneself Out

Please note that locking yourself out is not considered an emergency and any fees incurred for this service will be payable by the resident.

Policies & Procedures

Moving In or Out

There are a few simple rules to follow when moving in or out. These rules are intended to minimise disruption to fellow residents and to prevent damage to the building.

Rules & Procedures

Moving is restricted to between 7:00 AM and 2:00 PM on Mondays, Wednesdays and Fridays. This is because these are the days the caretaker is on the premises and they are required to put the protective lift coverings up, lock an elevator out for you and reserve the loading area.

Should you need their services outside of these hours, you will incur a cost of $88 inc GST as the caretaker will need to attend outside their contracted hours.

No moves are permitted on Sundays or Public Holidays. Moving must be arranged with Munro Property at least 48 hours before the move.

The following information is required to be provided to Munro Property:

- Apartment number
- Occupant/s' name and contact details
- Property manager's name and contact number (if applicable)
- Proposed day and time of moving in/out
- Name, address and contact number of the removalist or contractor
- Specify if the use of the lift is required and if so, the proposed times of use
- Forwarding details for the outgoing occupant/s

You will be responsible for any damage to common areas that occurs during your move. Management will inspect the areas prior to and following the move and, in the event of identified damage, inform you of any costs of the repairs undertaken.

On the Day

The removalist may enter the driveway and park to one side. It is imperative that the truck does not block access, particularly on Mondays, Wednesdays and Fridays when the bins are emptied.

Items can be transported through the carpark, through the access door, into the foyer and then to the lift.

During your moving times, one lift will be "locked", and will only travel from the ground floor to your floor for your convenience and the other residents' safety.

Friendly Reminders

- Do not leave boxes near doorways or stairwells as this is a safety hazard.
- Debris or boxes must not be left on common property.
- Please retain this information sheet for future use, and forward to your property manager (if applicable).

Noise

Whether you're an experienced member of community living or a relatively new convert to the apartment lifestyle, enjoying your own home also means living happily alongside others.

It is important to remember that in a community-titled property, you live in close proximity to your neighbours. Please keep volumes of stereos, televisions, and musical instruments to an acceptable level and avoid loud conversations on balconies and in public area. Sound also travels down through the floor levels.

In the first instance of a problem with noise, try talking with your neighbour. More often than not your neighbour may be completely unaware that they are even disturbing anyone around them. If you are unable to meet with them directly, a polite handwritten note is an alternate approach.

If communicating with your neighbour doesn't work out favourably, you'll need to consider talking to the body corporate manager. Under the guidance of the management committee, Munro can contact the owner of the neighbouring apartment and seek to remedy the issue.

As a general rule, no excessive noise should occur after 10 PM on weeknights and after 12 PM on Fridays and Saturdays.

If you are undertaking work at your property, or have engaged a tradesperson to do so, please ensure that construction noise ceases between the hours of 7 PM and 7 AM Monday to Saturday. It is also common courtesy to notify your neighbours of any expected disturbance.

Care should also be taken when using the fire escape doors. If not closed carefully, the slamming of the door can be disruptive to adjacent apartment residents.

Balconies

Your balcony is an extension of your home and also aesthetically adds to the look of the La Verde building that everyone enjoys.

We all have different likes and tastes, so to keep a uniform look and feel to the façade of the building we have the following rules:

- No items are to be thrown from an apartment window or balcony. This is illegal and dangerous.
- No one is permitted to hang washing, clothing or any other article from or on a balcony.
- Care must be taken when watering plants to prevent water running from your balcony onto the balconies of apartments below.
- You must not place any article other than outdoor settings, chairs, barbeques, or plants on the balcony.
- Barbeques must be connected to the mains gas. No charcoal or gas bottles are permitted.
- Any blinds or awnings fixed to the balcony that is visible from the streetscape must be in a neutral colour.

The bylaws should be consulted prior to erecting or fixing any fittings to the external walls or ceiling and written consent gained from the Body Corporate.

Pets

La Verde is a pet-friendly building but not everyone may like your furry friend jumping all over them as much as you do. To ensure all residents and pets live in harmony there are some rules regarding your pet that need to be followed.

All pets at the building must be approved by the Body Corporate Committee and you must abide by the rules pertaining to pets, including:

- Your pet must be less than 12 kilograms in weight.
- All dogs must be registered
- Cats and dogs must be desexed and microchipped
- Pets must be able to be carried at all times when in any community areas of the building. This includes the piazza, corridors and the carpark (everywhere except your apartment).
- Pets must not disturb other residents with ongoing noise.

- If your pet causes any mess on common property it is your responsibility to clean up after them.
- No pet-associated odours should be allowed to impact any community area or another resident's lot.
- Any pet that attacks a resident, guest, employee or other pet will immediately be banned from the building.
- Certified guide/assistance animals are automatically approved for residence with their owner at La Verde.
- An *Approval of Pet Application* form is available from the Strata Manager.

Tenants note: The above is also subject to approval from your property manager / landlord.

Carparks

All apartments have an allocated car park and residents should park their cars in their allocated space.

Cars must not be parked on main access driveways or in any position where they may cause an obstruction to others. Car bays are not to be used for any purpose other than the parking of a motor vehicle or motorcycle.

In the interests of safety, children are not permitted to ride cycles or play games in the car parking areas or driveways.

Each residence has one allocated parking space in the undercroft carpark. As per the Corporation bylaws, a person must take reasonable steps to ensure that their vehicle does not unreasonably obstruct other parking bays.

The parking spaces should not be used for non-vehicle storage purposes unless otherwise agreed to by the Corporation.

Maintenance & Services

Maintenance Requests

Maintenance requests can be submitted via email to the body corporate manager (See Contacts). Please include photographs to expedite the resolution process. Requests will be addressed based on priority.

Cleaning & Caretaking

Clean All Services have been engaged by the Corporation to clean and maintain the common areas, as well as attend to minor repairs. They are onsite Mondays, Wednesdays & Fridays from 7 AM to 3 PM.

Waste Disposal

Residents must properly dispose of all refuse. Each level (excluding the SOHO apartments) has two bin chutes: one for general waste and one for recyclable materials. Recyclable materials include:

- Glass bottles and jars
- Plastic containers (lids off)
- Milk and juice cartons
- Steel and aluminium cans
- Paper and cardboard

Please note: No plastic bags

To prevent blockage, all waste must be bagged, tied, or sealed shut and be of a size that will freely fall down the chutes into the garbage bins. This includes breaking down all boxes, including food boxes such as pizza boxes, to a size that fits down the chute.

For safety, place all glass bottles in bags and tie them securely to prevent breakage. Do not dispose of flammable materials or objects down the chute.

To avoid disturbing nearby residents, do not use the chutes between 9:00 PM and 7:00 AM.

Any spillages of food or liquids along the walkways (common areas) from transporting garbage must be cleaned up immediately.

Residents are responsible for disposing of larger items, such as boxes from moving, discarded household appliances, or furniture. These items must not be left or stored in any common areas.

Bin Collection Days

Bin collection days are on a Monday, Wednesday and Friday.

Safety & Security

Please ensure that all security doors / gates are closed and locked behind you. Security should take precedence over courtesy or convenience.

Entry Fobs

You should have received entry fob(s) upon the sale of the property or entering into a tenancy agreement. If you are a tenant and you require additional fobs, please contact your property manager. If you are an owner, please contact the body corporate manager (see Contacts).

For the security of the building, all fobs issued are recorded and must be accounted for whenever occupancy changes. All apartments may have a maximum of five (5) fobs. Should a fob be lost, stolen or damaged, it will require deactivation. You should always keep a record of the fob numbers in your possession to ensure a smooth transition should a fob require replacement.

Gate Remotes

You should have received gate remote(s) upon the sale of the property or entering into a tenancy agreement. If you are a tenant and you require additional remotes, please contact your property manager. If you are an owner, please contact the body corporate manager (see Contacts).

Apartment Keys

You should have received apartment door key(s) upon the sale of the property or entering into a tenancy agreement. If you are a tenant and you require additional keys, please contact your property manager. If you are an owner, please contact the body corporate manager for authority (see Contacts).

Service Infrastructure

Fire Safety

Fire safety equipment and smoke alarms are checked and serviced by Performance Fire Services. Access may be required sporadically to test smoke alarms.

If you notice repairs required to any of the fire service equipment, please notify the body corporation manager immediately (see Contacts).

Lift Maintenance & Repairs

Schindler Lifts attends the property periodically to attend to repairs and carry out maintenance to the lifts.

If you notice repairs required to either of the lifts, please notify the body corporation manager immediately (see Contacts).

La Verde: Moving In & Out

There are a few simple rules to follow when moving in or out. These rules are intended to minimise disruption to fellow residents and to prevent damage to the building.

Moving is restricted to between 7:00 AM and 2:00 PM on Mondays, Wednesdays and Fridays. This is because these are the days the caretaker is on the premises and they are required to put the protective lift coverings up, lock an elevator out for you and reserve the loading area.

Should you need their services outside of these hours, you will incur a cost of $88 inc. GST as the caretaker will need to attend outside their contracted hours. No moves are permitted on Sundays or Public Holidays.

Moving must be arranged with Munro Property at least 48 hours before the move.

The following information is required to be provided to Munro Property:

- Apartment number
- Occupant/s' name and contact details
- Property manager's name and contact number (if applicable)
- Proposed day and time of moving in/out
- Name, address and contact number of the removalist or contractor
- Specify if the use of the lift is required and if so, the proposed times of use
- Forwarding details for the outgoing occupant/s

You will be responsible for any damage to common areas that occurs during your move. Management will inspect the areas prior to and following the move and, in the event of identified damage, inform you of any costs of the repairs undertaken.

ON THE DAY

- The removalist may enter the driveway and park to one side. It is imperative that the truck does not block access, particularly on Mondays, Wednesdays and Fridays when the bins are emptied.
- Items can be transported through the carpark, through the access door, into the foyer and then to the lift.
- During your moving times, one lift will be "locked", and will only travel from the ground floor to your floor for your convenience and the other residents' safety.

FRIENDLY REMINDERS

- Do not leave boxes near doorways or stairwells as this is a safety hazard.
- Debris or boxes must not be left on common property.
- Please retain this information sheet for future use, and forward to your property manager (if applicable).

MUNRO PROPERTY

P 08 8132 2000
E corporations@munroproperty.com.au

Community Corporation No. 41146 Inc.
La Verde (Secondary Residential)
56-60 King William Street, KENT TOWN SA 5067

The following is a summary of policy decisions, resolutions, and articles as resolved by the strata corporation, by General Meeting or by the Committee of Management. This summary is merely a guide and should be treated as such, the relevant minutes should be consulted for precise wording. MUNRO Property Group will not be held accountable for any and all inaccuracies and/or errors prior to its management.

AGM 16/01/2025	**UNPAID LEVIES POLICY** **Approval of Debt Recovery Process for Arrears** Resolved as per the *Community Titles Act 1996 Section 114(8),* "a contribution, instalment or interest may be recovered as a debt", to adopt the revised policy of debt recovery, which is as follows: • For levies unpaid 14 days after their due date, owner/s will receive a reminder letter and a text message (stage 1). • For levies unpaid 60 days after their due date and greater than $50.00, the owner/s will receive a final notice outlining the cost associated with transferring the recovery to a lawyer and a text message (stage 2, cost $55.00). • For levies unpaid 90 days after their due date and greater than $500.00, the owner/s will receive a notice outlining that the recovery of overdue levies will be transferred to a solicitors' office specialising in debt recovery (stage 3, cost $150.00). **Motion CARRIED.** Defeated that all fees incurred by the Corporation associated with the debt recovery process (including, but not limited to, solicitors' fees and court costs) will be payable by the owner, recovered by the action and applied to the lot owner's account. **Defeated with one vote cast against.**

	Manager's Note: As per the *Community Titles Act 1996*, a unanimous resolution cannot pass if any votes are cast against it. Members are advised that as the motion has been defeated, it may hinder the Corporation's ability to recoup fees associated with debt recovery. The Corporation may choose to apply for relief to the Magistrates Court under Section 142 of the *Community Titles Act 1996*. This matter will be referred to the management committee. **Interest Charged on Overdue Accounts** As per the *Community Titles Act 1996 Section 14(b),* the Corporation may "fix (in accordance with the regulations) interest payable in respect of a contribution, or an instalment of a contribution, that is in arrears." Resolved that the interest rate of 15% per annum remains in place and is applied to owners who fall in arrears with their payments. **Motion CARRIED.**
EGM 3/10/2024	**Exclusive Use of Common Property - Lot 25** Resolved that the owner of lot 25 of Community Corporation No. 41146, be granted exclusive access for a term of five (5) years to the common property marked 'Bike Store D' on the attached plan, for the purposes of ease of access to their allocated carpark. The management committee have confirmed that this area has never been utilised by the Corporation, nor are there any immediate plans to. **Motion CARRIED.**
AGM 24/04/2024 (CC 41143)	**Lift Maintenance / Costs** It is noted that the Corporation has a contract with Schindler Lifts (exp. 14 December 2028) for the maintenance of the lifts. It is further noted that Community Corporation No. 41145 Inc. ("SOHO"), and lots 1, 2 & 3 of Community Corporation No. 41144 Inc. (commercial premises) are exempt from contributing to these

	costs in accordance with bylaw 43, and the resolution passed at the 2023 Annual General Meeting. Munro advised that the previous management had raised special levies against those entities for the lift costs, but it was unclear as to the reasoning behind the split, and they also raised the special levies in advance. Munro explained that this approach is problematic for two reasons: Firstly, the split could not be justified if questioned in the future. Secondly, the recovery of costs was based on the projected amount, not the actual expenditure. This method would not account for any increases in service prices or repairs not covered under the contract. After thorough consideration, it was decided that the costs should be divided based on the below calculation of the lot entitlements. Additionally, the actual cost of lift expenditure should be raised as a recovery against the relevant parties each quarter. <u>Primary Lot Entitlements</u> 1001 (41144): 1,075 (12.13%) 1003 (41146): <u>7,785 (87.87%)</u> Total: 8,860 (100%) <u>Commercial Lot Entitlements</u> Lot 4: 1,370 (31.42%) Lot 5: 1,460 (33.48%) Lot 6: <u>1,530 (35.09%)</u> Total: 4,360 (100%) Therefore, 41146 will be responsible for 87.87% of the total lift costs, and 41144 will be responsible for 12.13%. The 12.13% will then be recovered against the owners of lots 4, 5 and 6 of 41144 as the percentage of the sum of their lot entitlements. Munro further advised that they recently received advice from Schindler Lifts that the two lifts are not equipped with dual-SIM diallers as required by law. Resolved that the attached quote from Schindler Lifts for $5,749.70 plus a monthly service fee of $49.50 per lift be accepted; and further resolve to authorise Munro to cancel the current single-SIM dialler phone line with Optus. **Motion CARRIED.**

AGM 4/04/2024	**UNPAID LEVIES POLICY** Approval of Debt Recovery Process for Arrears Defeated, as per *The Community Titles Act 1996 Section 114(8),* "a contribution, instalment or interest may be recovered as a debt", to adopt the revised policy of debt recovery, which is as follows: • For levies unpaid 14 days after their due date, owner/s will receive a reminder letter and a text message (stage 1). • For levies unpaid 60 days after their due date and greater than $50.00, the owner/s will receive a final notice outlining the cost associated with transferring the recovery to a lawyer and a text message (stage 2, cost $55.00). • For levies unpaid 90 days after their due date and greater than $500.00, the owner/s will receive a notice outlining that the recovery of overdue levies will be transferred to a solicitors' office specialising in debt recovery (stage 3, cost $150.00). • Any and all additional solicitors' costs will be payable by the owner. All costs initially will need to be met by the Corporation but will be recovered by the action and applied to the lot owner's account. **Motion DEFEATED.** Munro advises that the above policy is in place as it only requires an ordinary resolution to pass. The unanimous resolution to recover these costs from the owner who has incurred them however has been defeated. Interest Charged on Overdue Accounts As per *The Community Titles Act 1996 Section 14(b)* the Corporation may "fix (in accordance with the regulations) interest payable in respect of a contribution, or an instalment of a contribution, that is in arrears." The Corporation to confirm that the interest rate of 15% per annum remain in place and be applied to owners who fall in arrears with their payments. **Motion CARRIED.**
AGM 14/03/2023 (CC 41143)	Cleaning of Common Property - (Caretaking, Cleaning, Gardening: Including the residential common areas) It was resolved that the Corporation continues with the arrangement of the Corporation caretaker undertaking this service of the periodic cleaning of all common areas of the Corporation.

	It was noted that the Management Committee would continue to monitor the cleaning duties. It was agreed unanimously, as adopted from the 2021 AGM concerns regarding allocation of service fees based on the location of all common areas, that Corporation 41146 is responsible for 40% of these services and funding accordingly. <u>Gardening & Grounds Maintenance</u> (Including the residential common areas - level 3 garden) It was resolved that the Corporation continues with the services of the Corporation Caretaker for the garden maintenance at the property. It was agreed unanimously, as adopted from the 2021 AGM concerns regarding allocation of service fees for level 3 garden common areas, that Corporation 41146 is responsible for 60% of these services and funding accordingly. <u>Lift Maintenance</u> It was resolved that the Corporation continues with Schindler Lifts for the periodic maintenance of the lifts at the Corporation noting there is a five-year agreement in place. It was noted that lift services are not applicable to Lot Owners of Lots one, two & three of Community Corporation 41144 Inc, and Community Corporation 41145 Inc. and therefore are excluded for requirements to fund lift maintenance. <u>Grease Pit / Pump & Sump Cleaning</u> It was noted at the 2022 Annual General Meeting that as costs associated with on-going maintenance and cleaning of the grease pit are the responsibility of Lot Owners of Lots one and two of Community Corporation 41144 Inc. and that arrangements for these services will be moved and managed by Corporation 41144 Inc. <u>Maintenance Policy</u> The Corporation adopt the following maintenance procedures to assist in expediting repairs; a) The Corporation authorise general repairs to proceed where costs are less than $500 to $600 or; repairs are of an emergency and/or essential nature, and for an Office Bearer to be informed of any required actions. b) Unless alternate instructions are resolved at a general meeting of the Corporation;

	a. The Corporation's preference is for 2 quotes for general repairs of $500.00 to $2,000.00, noting Office Bearers are authorised to engage a contractor when the first quote is presented. b. The Corporation's preference is for 3 quotes for any general repairs exceeding $2,000.00 c) All quotes are to be made available to Office Bearers at the earliest opportunity for a decision, and where a General Meeting has approved for maintenance works to proceed; a. The Manager is authorised to select the most suitable quote & arrange repairs, should instructions have not been received from an Office Bearer within a determined period of the General Meeting, or 30 days of quotes presented. <u>Shade Blinds</u> It was discussed that the approved colour is a plain charcoal. The Management Committee must approve of the colour in writing before any blinds are installed. The colour/shade if available in brochure form can be emailed to the Body Corporate Manager who can then submit to the Office Bearers for final approval. <u>Electric Vehicle Charging Stations</u> The process to install charging station was discussed. Franc Falco has previously installed a charger and remarked that the wiring needs to be installed to the meter of the apartment so that owners are billed individually. The charger is to be installed within the apartment allocated carpark. The Electrician who wired the building is the preferred contractor. Approval is to be sought from the Committee in the first instance. The Committee are looking to write up a procedure to help owners with installing an electric vehicle charging station as more people convert from petrol to electric.
AGM 3/03/2022	No resolutions recorded.
AGM 9/03/2021	No resolutions recorded.
AGM 26/03/2020	No resolutions recorded.
MCM 16/05/2019 (CC 41143)	<u>Pet approvals – SOHO 25</u> An application was received for a pet for SOHO 25. The Committee approved this application.
AGM 28/09/2019	No resolutions recorded.
FSGM 21/02/2018	<u>By-Law 13.3 – Appearance of building</u> To consider and adopt a proposal by the Developer that;

	The Office Bearers and Committee are empowered to determine/nominate suitable specifications of window treatments, and balcony items to ensure a neutral shade of off white/ivory to maintain uniform visual amenity to the streetscape of the building. Motion Carried <u>Motion on a more pet friendly policy</u> To resolve that; Community Corporation 41143 Inc. and secondary Corporations 41145 Inc and 41146 Inc, approve on a case–by-case basis for any Lot to have one small to medium size dog or a cat, subject to application to, and approval by the management committee, with the proviso that the management committee reserves the right to withdraw approval for any continuously noisy, aggressive or poorly behaved pet on the property. Subject to Management Committee approval being given; • Only non-aggressive dog breeds will be considered. • Dogs must be kept on a leash when on common property, or secured within the unit. • The Corporation has requested that all pets be carried when on Common Property. • Cleaning or repairs of the Lot and common areas from soiling or damage by the pet is the responsibility of the pet's owner. • Any continuous complaints regarding noise, aggressive and antisocial behaviour by the pet or neglect by the owner/s may result in Management Committee approval being rescinded and the owner/s being required to remove the animal from the property. • This does not apply to persons requiring a guide/assistance animal. **Motion Carried**

PURPOSE: SECONDARY COMMUNITY STRATA

AREA NAME: KENT TOWN

MAP REF: 6628/42/H

COUNCIL: THE CORPORATION OF THE CITY OF NORWOOD PAYNEHAM AND ST. PETERS

LAST PLAN: C41143

DEVELOPMENT NO: 155/C028/17/001/49833

APPROVED:
STEVE ANDREWS
04/10/2017

DEPOSITED:
MARK MCNEIL
13/11/2017

C41146

SHEET 1 OF 7

58802_text_01_v06_Version_6

AGENT DETAILS: JOHN C BESTED & ASSOCIATES PTY LTD
362 MAGILL RD
KENSINGTON PARK SA 5068
PH: 83327111
FAX: 83641829

AGENT CODE: JCBA

REFERENCE: 17160.6

SURVEYORS CERTIFICATION: I ASHLEY GREG WINDOW , a licensed surveyor under the Survey Act 1992, certify that (a) I am uncertain about the location of that part of the service infrastructure shown between the points marked > and < on the plan; and (b) This community plan has been correctly prepared in accordance with the Community Titles Act 1996
4th day of October 2017 Ashley Window Licensed Surveyor

SUBJECT TITLE DETAILS:

PREFIX	VOLUME	FOLIO	OTHER	PARCEL	NUMBER	PLAN	NUMBER	HUNDRED / IA / DIVISION	TOWN	REFERENCE NUMBER
PT CT	5720	848		LOT(S)	1003	C	41143	ADELAIDE		
PT CT	5192	227		LOT(S)	1003	C	41143	ADELAIDE		
PT CT	5088	528		LOT(S)	1003	C	41143	ADELAIDE		
PT CT	5088	529		LOT(S)	1003	C	41143	ADELAIDE		

OTHER TITLES AFFECTED:

EASEMENT DETAILS:

STATUS	LAND BURDENED	FORM	CATEGORY	IDENTIFIER	PURPOSE	IN FAVOUR OF	CREATION

ANNOTATIONS: PRIMARY PLAN IS C41143
ENCROACHMENT OF FEATURE PANEL A. FEATURE PANEL B. FEATURE PANEL C. FEATURE PANEL D. FEATURE PANEL E. FEATURE PANEL F AND FEATURE PANEL G OCCURS OVER KING WILLIAM STREET VIDE C41143
AMENDMENT TO COURTYARD SUBSIDIARY SHEET 7 VIDE PR 12828571 PRO. R.G. 20.11.2017

C41146

SHEET 2 OF 7

58802_pland_1_V03_Version_6

BEARING DATUM: ① - ② 56°37'20"
DERIVATION: F58965 ADOPTED

TOTAL AREA :

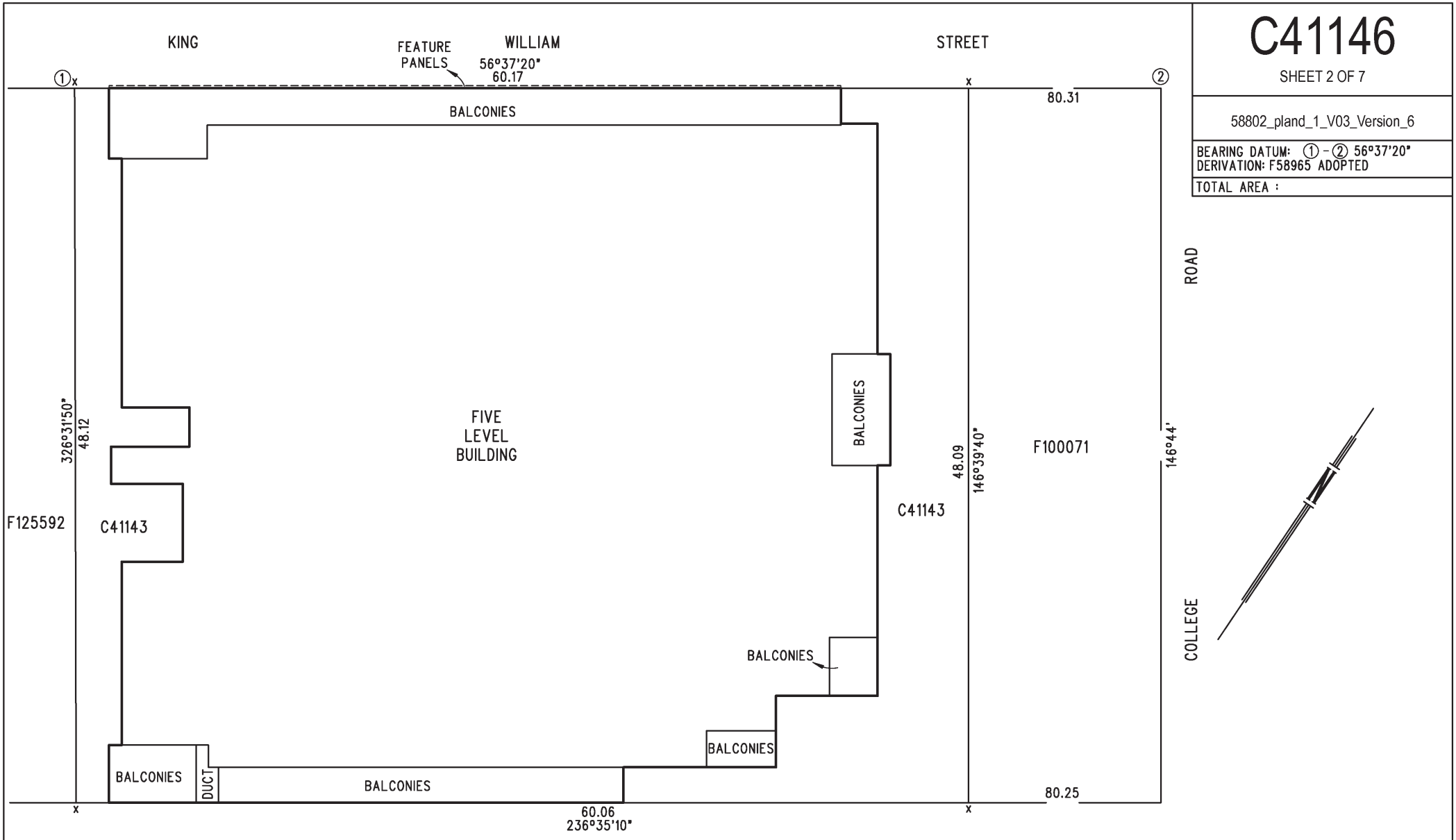

SITE PLAN

0 2.5 5 7.5 10 12.5

SCALE - METRES

JOHN C BESTED & ASSOC PTY LTD
ABN 23 007 916 814
SURVEYING & PLANNING CONSULTANTS
362 MAGILL ROAD KENSINGTON PARK 5068
PHONE (08) 8332 7111 FAX (08) 8364 1829
email surveyors@johnbested.com.au

REF	DRAWING	VERSION
17160.6	17160.6-COM	8

C41146

SHEET 3 OF 7

58802_pland_2_V03_Version_6

KING WILLIAM STREET

C41143

F125592

F100071

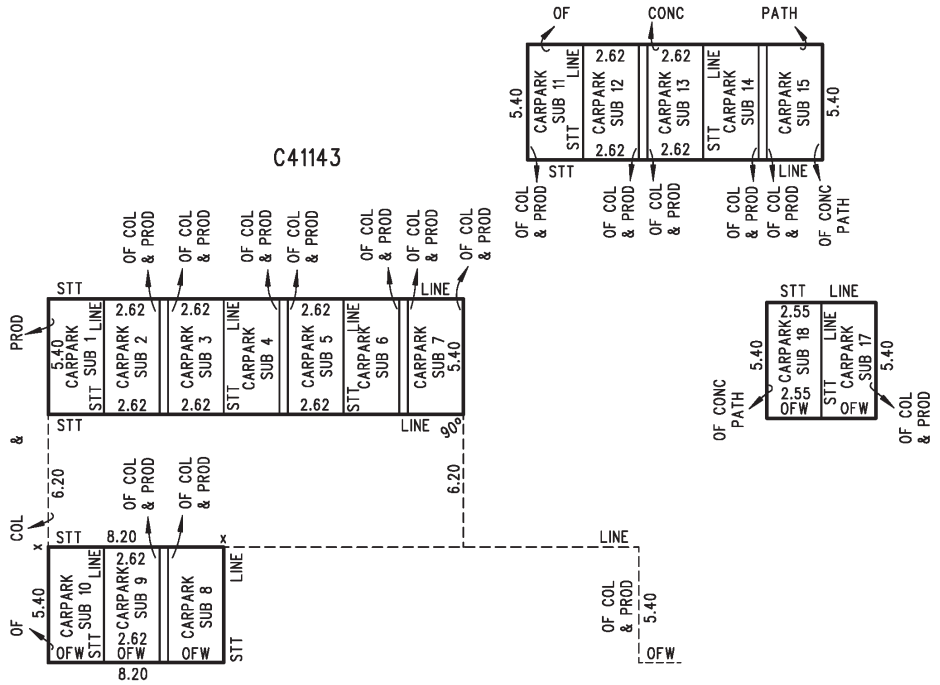

THE LOWER AND UPPER LIMITS OF LOT SUBSIDIARY SHOWN AS CARPARK ARE EXISTING FLOOR LEVEL AND 2.50 METRES ABOVE THE SAME RESPECTIVELY UNLESS LIMITED IN HEIGHT BY OVERHANGING STRUCTURES BELOW 2.50 METRES.

OF.....OUTSIDE FACE
COL.....COLUMN
PROD....PRODUCTION
CONC....CONCRETE
STT.....STRAIGHT
OFW.....OUTSIDE FACE WALL

LITTLE RUNDLE STREET

LEVEL ONE - GROUND FLOOR

0 2.5 5 7.5 10 12.5

SCALE - METRES

JOHN C BESTED & ASSOC PTY LTD
ABN 23 007 916 814
SURVEYING & PLANNING CONSULTANTS
362 MAGILL ROAD KENSINGTON PARK 5068
PHONE (08) 8332 7111 FAX (08) 8364 1829
email surveyors@johnbested.com.au

REF	DRAWING	VERSION
17160.6	17160.6-COM	8

C41146

SHEET 4 OF 7

58802_pland_3_V03_Version_6

KING WILLIAM STREET

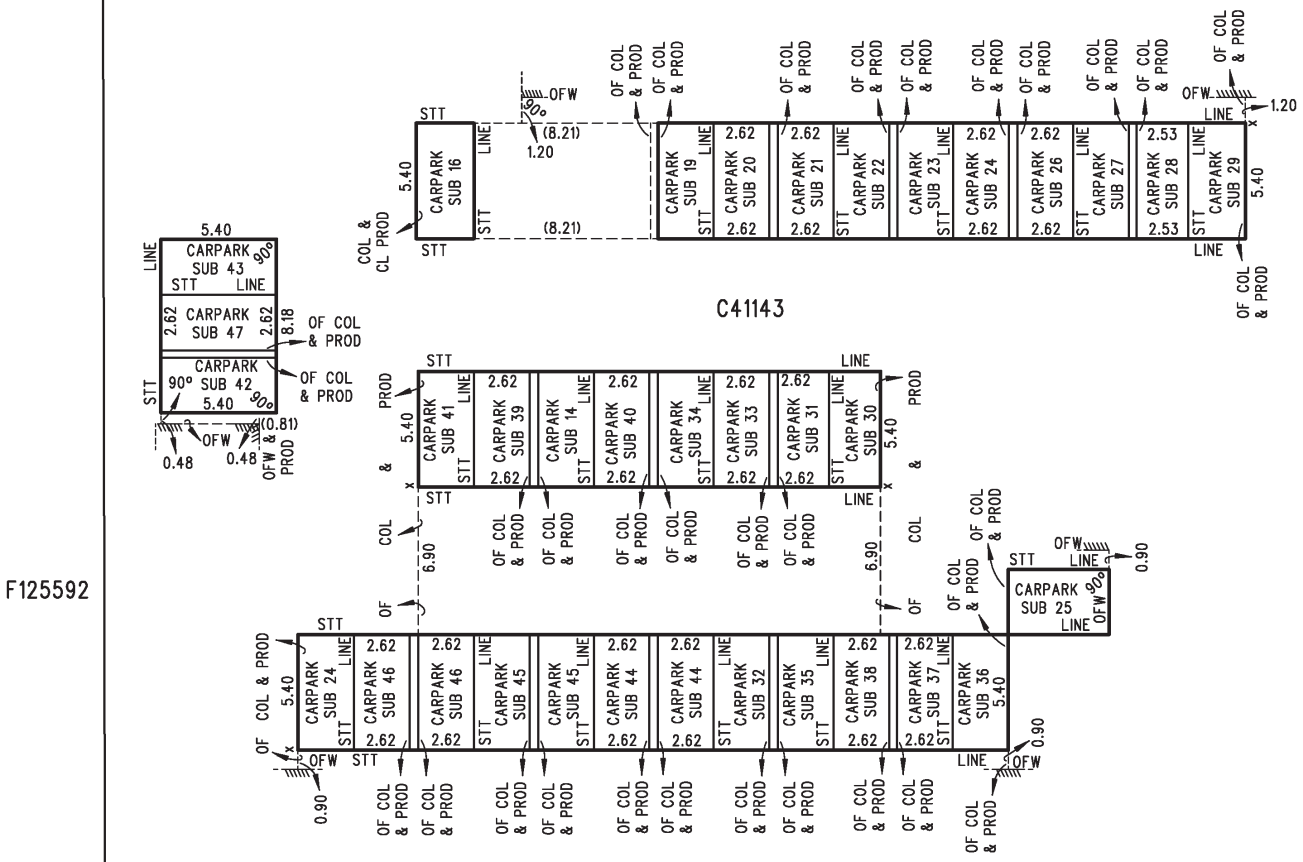

C41143

F125592

F100071

THE LOWER AND UPPER LIMITS OF LOT SUBSIDIARY SHOWN AS CARPARK ARE EXISTING FLOOR LEVEL AND 2.50 METRES ABOVE THE SAME RESPECTIVELY UNLESS LIMITED IN HEIGHT BY OVERHANGING STRUCTURES BELOW 2.50 METRES.

OF.....OUTSIDE FACE
COL.....COLUMN
PROD....PRODUCTION
CONC....CONCRETE
STT.....STRAIGHT
OFW.....OUTSIDE FACE WALL
CL.....CENTRELINE

LITTLE RUNDLE STREET

LEVEL TWO - FIRST FLOOR

0 2.5 5 7.5 10 12.5

SCALE - METRES

JOHN C BESTED & ASSOC PTY LTD
ABN 23 007 916 814
SURVEYING & PLANNING CONSULTANTS
362 MAGILL ROAD KENSINGTON PARK 5068
PHONE (08) 8332 7111 FAX (08) 8364 1829
email surveyors@johnbested.com.au

REF	DRAWING	VERSION
17160.6	17160.6-COM	8

C41146

SHEET 5 OF 7

58802_pland_4_V03_Version_6

KING WILLIAM STREET

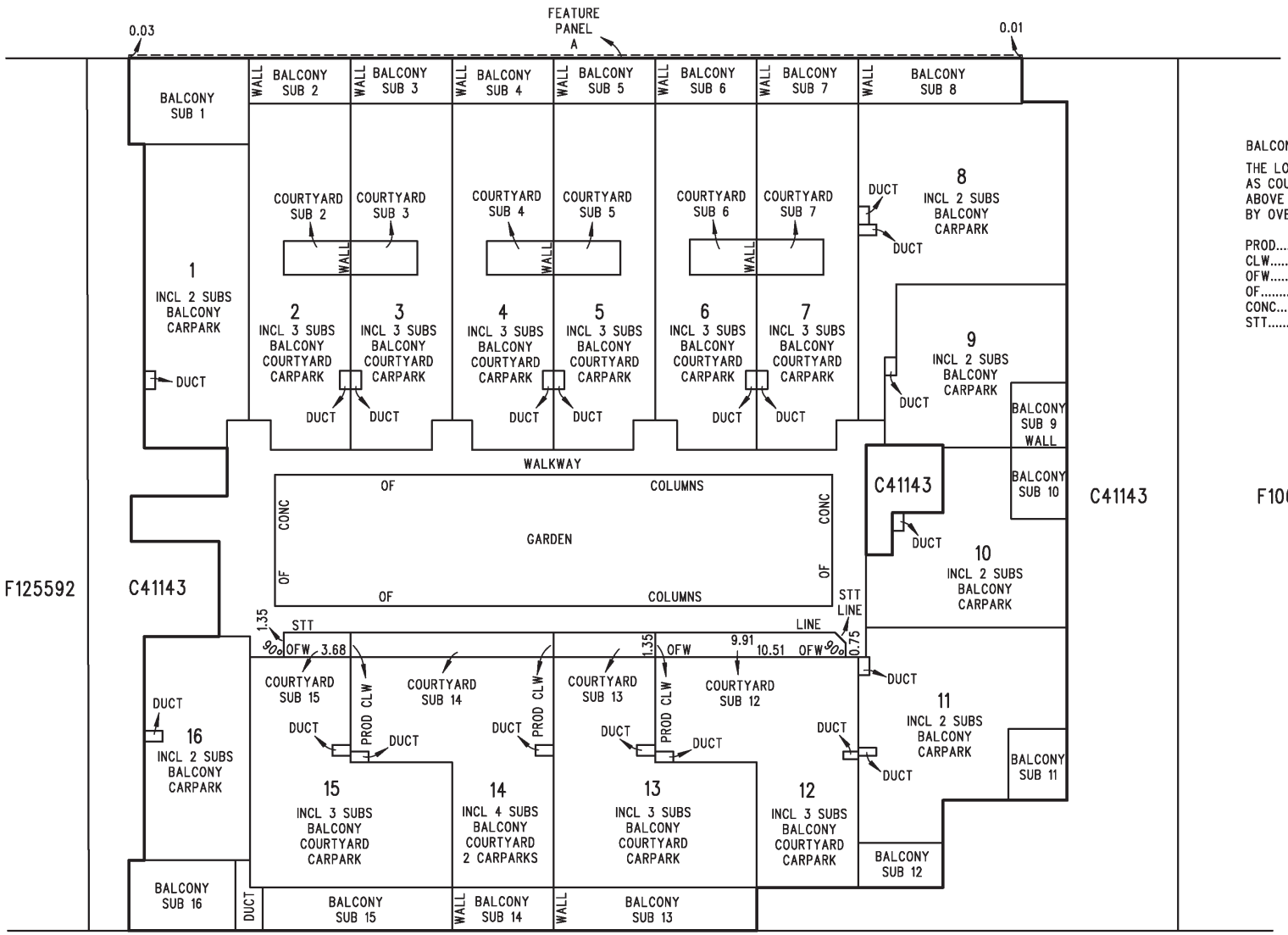

BALCONIES ARE COVERED.

THE LOWER AND UPPER LIMITS OF LOT SUBSIDIARY SHOWN AS COURTYARD ARE EXISTING FLOOR LEVEL AND 2.70 METRES ABOVE THE SAME RESPECTIVELY UNLESS LIMITED IN HEIGHT BY OVERHANGING STRUCTURES BELOW 2.70 METRES.

PROD.....PRODUCTION
CLW.....CENTRELINE WALL
OFW.....OUTSIDE FACE WALL
OF.....OUTSIDE FACE
CONC.....CONCRETE
STT.....STRAIGHT

LEVEL THREE - SECOND FLOOR

0 2.5 5 7.5 10 12.5

SCALE - METRES

JOHN C BESTED & ASSOC PTY LTD
ABN 23 007 916 814
SURVEYING & PLANNING CONSULTANTS
362 MAGILL ROAD KENSINGTON PARK 5068
PHONE (08) 8332 7111 FAX (08) 8364 1829
email surveyors@johnbested.com.au

REF	DRAWING	VERSION
17160.6	17160.6-COM	8

C41146

SHEET 6 OF 7

58802_pland_5_V03_Version_6

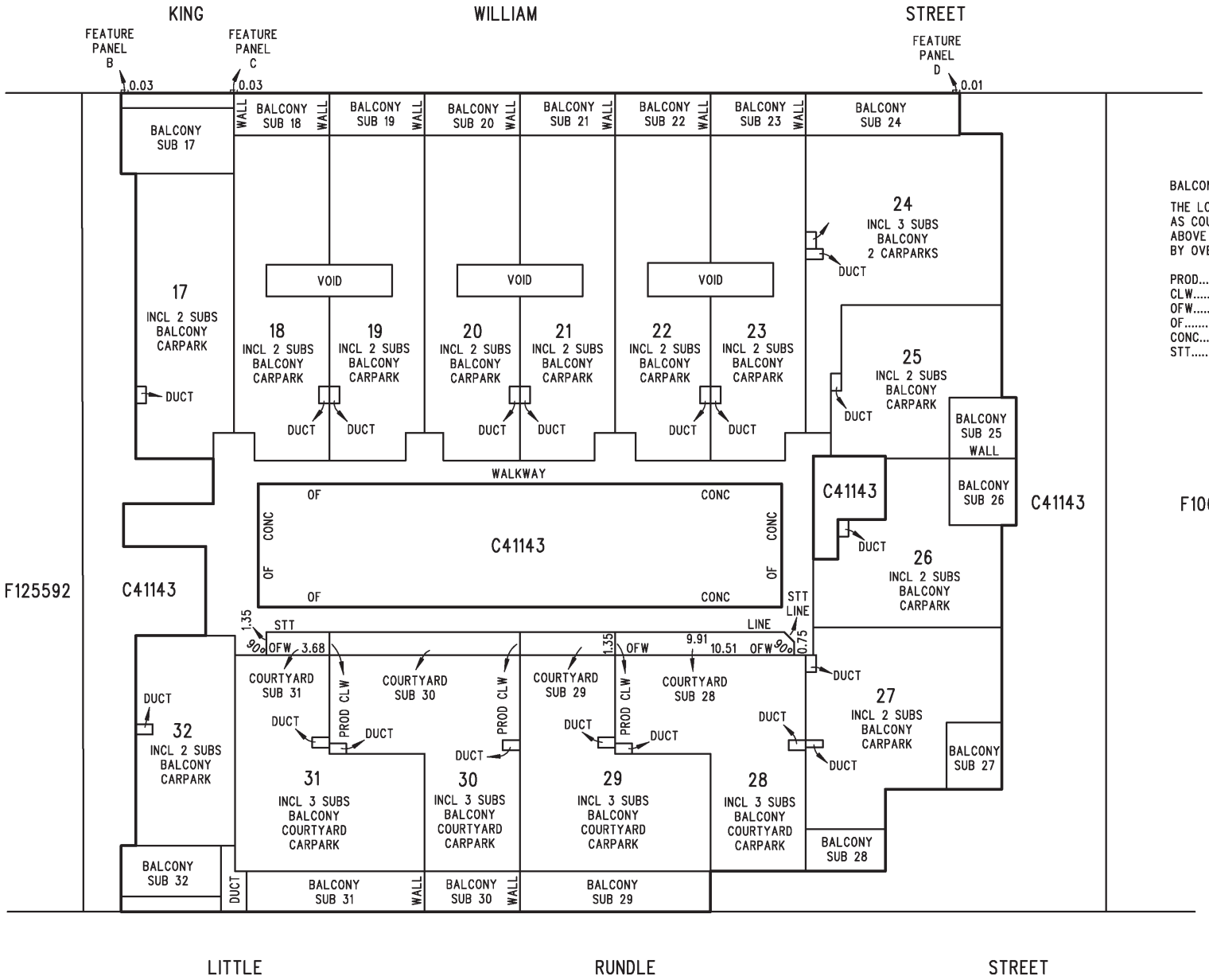

BALCONIES ARE COVERED

THE LOWER AND UPPER LIMITS OF LOT SUBSIDIARY SHOWN AS COURTYARD ARE EXISTING FLOOR LEVEL AND 2.70 METRES ABOVE THE SAME RESPECTIVELY UNLESS LIMITED IN HEIGHT BY OVERHANGING STRUCTURES BELOW 2.70 METRES.

PROD.....PRODUCTION
CLW.....CENTRELINE WALL
OFW.....OUTSIDE FACE WALL
OF.....OUTSIDE FACE
CONC.....CONCRETE
STT.....STRAIGHT

LEVEL FOUR - THIRD FLOOR

0 2.5 5 7.5 10 12.5

SCALE - METRES

JOHN C BESTED & ASSOC PTY LTD
ABN 23 007 916 814
SURVEYING & PLANNING CONSULTANTS
362 MAGILL ROAD KENSINGTON PARK 5068
PHONE (08) 8332 7111 FAX (08) 8364 1829
email surveyors@johnbested.com.au

REF	DRAWING	VERSION
17160.6	17160.6-COM	8

C41146

SHEET 7 OF 7

58802_pland_6_V04_Version_6

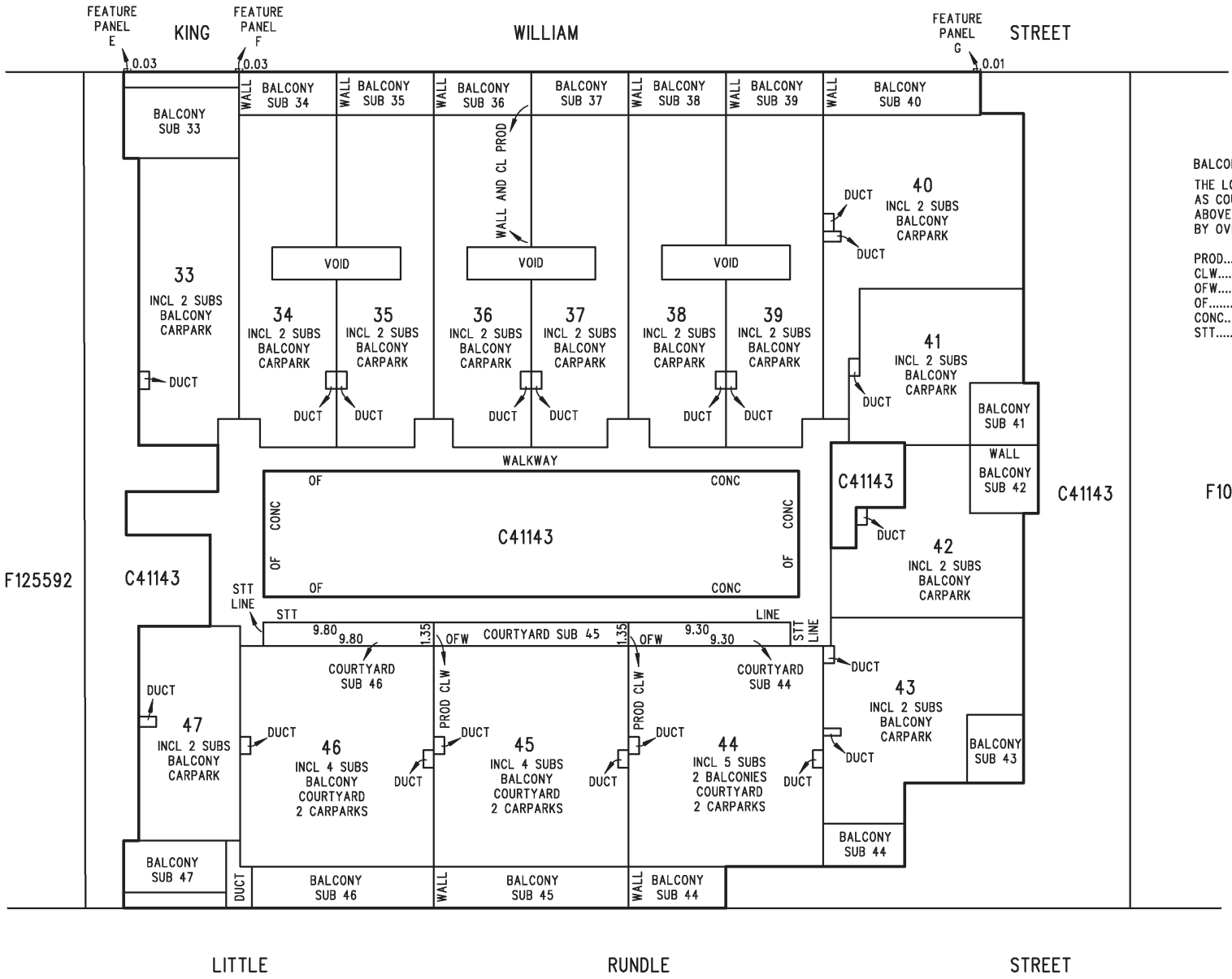

BALCONIES ARE COVERED

THE LOWER AND UPPER LIMITS OF LOT SUBSIDIARY SHOWN AS COURTYARD ARE EXISTING FLOOR LEVEL AND 2.70 METRES ABOVE THE SAME RESPECTIVELY UNLESS LIMITED IN HEIGHT BY OVERHANGING STRUCTURES BELOW 2.70 METRES.

PROD.....PRODUCTION
CLW.....CENTRELINE WALL
OFW.....OUTSIDE FACE WALL
OF.....OUTSIDE FACE
CONC.....CONCRETE
STT.....STRAIGHT

LEVEL FIVE - FOURTH FLOOR

0 2.5 5 7.5 10 12.5

SCALE - METRES

JOHN C BESTED & ASSOC PTY LTD
ABN 23 007 916 814
SURVEYING & PLANNING CONSULTANTS
362 MAGILL ROAD KENSINGTON PARK 5068
PHONE (08) 8332 7111 FAX (08) 8364 1829
email surveyors@johnbested.com.au

REF	DRAWING	VERSION
17160.6	17160.6-COM	8

LOT ENTITLEMENT SHEET

COMMUNITY PLAN NUMBER

C41146

SHEET 1 OF 2

ACCEPTED

Mark McGill 13/11/2017

PRO REGISTRAR-GENERAL

DEV. No. : 155/C028/17

SCHEDULE OF LOT ENTITLEMENTS		
LOT	**LOT ENTITLEMENT**	**SUBDIVIDED**
1	193	
2	192	
3	204	
4	204	
5	204	
6	243	
7	192	
8	225	
9	188	
10	168	
11	210	
12	204	
13	226	
14	209	
15	226	
16	148	
17	207	
18	194	
19	194	
20	194	
21	194	
22	194	
23	205	
24	228	
25	188	
26	168	
27	210	
28	207	

LOT ENTITLEMENT SHEET

SCHEDULE OF LOT ENTITLEMENTS		
LOT	**LOT ENTITLEMENT**	**SUBDIVIDED**
29	226	
30	209	
31	218	
32	148	
33	218	
34	216	
35	216	
36	205	
37	205	
38	216	
39	205	
40	282	
41	199	
42	198	
43	238	
44	344	
45	333	
46	333	
47	172	
AGGREGATE	**10,000**	

COMMUNITY PLAN NUMBER

C41146

SHEET 2 OF 2

ACCEPTED

Mark Mcleil 13/11/2017

PRO REGISTRAR-GENERAL

DEV. No. : 155/C028/17

CERTIFICATE OF LAND VALUER

I ***Zac Vartuli***

being a land valuer within the meaning of the Land Valuers Act 1996 certify that the schedule is correct for the purposes of the Community Titles Act 1996

Dated the 27th day of September 2017

Signature of Land Valuer

STATEMENT PURSUANT TO SECTION 139 OF THE *COMMUNITY TITLES ACT 1996*

Date of Statement: **28 October 2026**

Community Lot in respect of which the Statement is issued:Lot **1003** in **Community Plan** No**. 41143 at La Verde (Primary), 56-60 King William Street, KENT TOWN SA 5067**

Person requesting certificate:
Name: Bertram Form 1 Shop,
Address: Via: sonia@bertramform1shop.com

The Community corporation certifies the following with respect to the Lot being the subject of this Statement:

1. Administrative fund – contributions payable by regular periodic instalments or lump sum

Total amount last determined with respect to the lot

Amount	Period
$196,960.52	01 Jul 2026 to 30 Jun 2027

Number of instalments payable (if contributions payable by instalments) 4

Amount of each instalment, period to which instalment relates and date due

Amount	Period	Date due
$49,240.13	01 Jul 2026 to 30 Sep 2026	13 Nov 2026
$49,240.13	01 Oct 2026 to 31 Dec 2026	01 Dec 2026
$49,240.13	01 Jan 2027 to 31 Mar 2027	01 Jan 2027
$49,240.13	01 Apr 2027 to 30 Jun 2027	01 Apr 2027

Amount owing $0.00

Interest due on unpaid levies $0.00

Amount in credit for prepaid levies $0.00

2. Sinking fund – contributions payable by regular periodic instalments or lump sum (section 76(1) of the Act)

Total amount last determined with respect to the lot

Amount	Period
$30,055.32	01 Jul 2026 to 30 Jun 2027

Number of instalments payable (if contributions payable by instalments) 4

Amount of each instalment, period to which instalment relates and date due

Amount	Period	Date due
$7,513.83	01 Jul 2026 to 30 Sep 2026	13 Nov 2026
$7,513.83	01 Oct 2026 to 31 Dec 2026	01 Dec 2026
$7,513.83	01 Jan 2027 to 31 Mar 2027	01 Jan 2027
$7,513.83	01 Apr 2027 to 30 Jun 2027	01 Apr 2027

Amount owing $0.00

Interest due on unpaid levies $0.00

Amount in credit for prepaid levies $0.00

3. Special contributions

None

4. Particulars of Assets and Liabilities of the Corporation

A copy of the Balance Sheet at the date of this Statement is attached.

5. Particulars of any Expenditure

(a) Incurred by the Corporation

As per the Minutes provided.

(b) Resolved to be incurred to which the unit holder must, or is likely to be required to, contribute

As per the Minutes provided.

6. Insurance policies

Particulars of all insurance policies that the community corporation has taken out.

Policy No. HU0038241 CHU Underwriting Agencies Pty Ltd
Type: Building Broker:

Premium: $77,197.14 Paid on: 14/04/2026 Policy start date: 15/04/2026 Next due: 15/04/2027

Cover	*Sum insured*	*Excess*	*Notes*
Sum Insured	$36,915,000.00	$2,000.00	
Loss of Rent/Temp Accom(15%)	$5,537,250.00		
Common Area Contents	$262,500.00		
Public Liability	$20,000,000.00		
Voluntary Workers	$300,000/$3,000		
Fidelity Guarantee	$250,000.00		
Office Bearers Legal Liability	$5,000,000.00		
Machinery Breakdown (Over 5Kw)	$100,000.00	$500.00	
Catastrophe	$11,074,500.00		
Government Audit Costs	$25,000.00		
Lot Owners Fixtures & Improvements	$250,000.00		
Flood	Included		
Appeal Expenses	$100,000.00		
Legal Defence Expenses	$50,000.00		
Extended cover - Rent/Temp Accommodation	$1,661,175.00		
Escalation in Cost of Temp Accommodation	$553,725.00		
Cost of Storage and Evacuation	$553,725.00		

Commission $12,608.87

7. Documents Supplied

(i) Minutes of general meetings of the corporation and meetings of the management committee for the last two years
(ii) Statement of Accounts of the corporation last prepared by the corporation
(iii) The current policies of insurance taken out by the corporation

The information provided is accurate as at the date of this Statement and is not intended to be relied upon by any party other than the person who requested this Statement under Section 139 of the Act.

NOTE:

An inspection of the accounting records, minute books of the corporation and any other prescribed documentary material may be arranged by application to the Agent at the address listed below:

This Statement was prepared on behalf of Community Corporation No. 41143 Inc. by

Jason Nash
Munro Property Group
136 The Parade
NORWOOD SA 5067

MUNRO™ Property Group Pty Ltd
ABN 41 007 878 079

t 08 8132 2000

Level 1, Suite 3, 136 The Parade
Norwood SA 5067
corporations@munroproperty.com.au
munroproperty.com.au

MINUTES OF THE ANNUAL GENERAL MEETING OF COMMUNITY PLAN 41143

Meeting In accordance with the Community Titles Act 1996

La Verde (Primary)
56-60 King William Street, KENT TOWN, SA, 5067

In accordance with the *Community Titles Act 1996 Section 81 (1)* the Officers of the Corporation called the Annual General Meeting.

DATE: **21 October 2026**
TIME: **05:00 PM**
LOCATION: **Apt. 44, 56-60 King William Street, KENT TOWN, SA, 5067**
https://msteams.link/MZEG

Attendance

Lot 1001	Community Corporation No. 41144 Inc.	Denice Hansen
Lot 1002	Community Corporation No. 41145 Inc.	Paul Garner
Lot 1003	Community Corporation No. 41146 Inc.	Grant Piggott

Others in attendance
Jason Nash on behalf of Munro.

Apologies
Nil

Proxy Voting

In accordance with *The Community Titles Act 1993 Section 84(3)*, proxies were tabled and subsequently the absentee votes on the proposed agenda have also been tabled as per the *Community Titles Act 1993 Section 84 (11)*

Quorum

In accordance with *The Community Titles Act 1996 Section 83(4)*, a quorum is determined by dividing the number of persons entitled to attend and vote (financial members) at the meeting by two, disregarding any fraction and adding one. At the time of the meeting, 3 financial members were present, therefore the meeting opened at 05:07 PM.

MEETING OPENING, APPOINTMENT OF MEETING CHAIRPERSON & MINUTE SECRETARY

Resolved that Jason Nash of Munro would assist the Presiding Officer by conducting the meeting; and assist the Secretary in the recording of minutes as per the *Community Titles Act 1996 Section 83(3a).*

Motion CARRIED.

Yes: 3	No: 0	Abstain: 0	Inv: 0

DECLARATION OF INTEREST

In accordance with the *Community Titles Act 1996 Section 85*, it is a legal requirement for members to make known to the meeting any direct or indirect financial interest in matters to be voted upon at a properly convened meeting.

CONFIRMATION OF PREVIOUS MINUTES

Resolved, in accordance with the *Community Titles Act 1996 Section 81(5a),* that the minutes of the last Annual General Meeting held on 14 August 2025 be confirmed as a true record of the proceedings of that meeting.

Motion CARRIED.

Yes: 3	No: 0	Abstain: 0	Inv: 0

ACCEPTANCE OF FINANCIAL STATEMENTS

Resolved, in accordance with the *Community Titles Act 1996 Section 81(5(d))* and the *Community Titles Regulations 2011 Section 16,* that the full financial statements year ending 30th of June 2026 having been circulated, tabled and discussed be accepted as a true and accurate record of the Corporation's financial standings.

Motion CARRIED.

Yes: 3	No: 0	Abstain: 0	Inv: 0

ELECTION OF OFFICE BEARERS

Presiding Officer - Paul Garner representing Community Corporation No. 41145 Inc.
Secretary - Denice Hansen representing Community Corporation No. 41144 Inc.
Treasurer - Grant Piggott representing Community Corporation No. 41146 Inc.

Resolved in accordance with the *Community Titles Act 1996 Section 76*, that the Corporation fill the above positions as per successful nomination at the meeting.

As per the *Community Titles Act 1996 Section 92*, If a vacancy arises in any of the positions, the position will need to be filled at a General Meeting, or, if the corporation has a management committee, the committee may, by ordinary resolution, appoint a lot owner to fill the vacancy.

Motion CARRIED.

Yes: 3	No: 0	Abstain: 0	Inv: 0

APPOINTMENT OF MANAGEMENT COMMITTEE

Resolved the appointment of a management committee comprised of the office-bearers; and that the management committee be authorised to give consent for each occurrence of unplanned maintenance work that may occur throughout the year.

The *Community Titles Act 1996 Section 92(2)* states that: Subject to this Act and to any limitations imposed by the Corporation or by the bylaws of the community scheme, a management committee has full power to transact any business of the corporation.

Munro recommends the appointment of a management committee to ensure that the management consultant has the required directives from the representatives to carry out its business as it sees fit.

The management committee has the authority to approve quotes, some minor additions, alterations, and approvals, however may (at its discretion) call a General Meeting to consult with all owners on any matter.

Owners are reminded the management committee does not have the power to authorise anything for which a special or unanimous resolution of the Corporation is required by the Act or the bylaws.

Munro advises that additional fees may apply if a representative is invited to attend committee meetings, assisting with chairing, and recording the minutes.

Should a management consultant not be required, it is the responsibility of the Secretary to ensure that detailed minutes are taken and provided to Munro to hold on file and carry out any requests in accordance with the contract of appointment.

Motion CARRIED.

Yes: 3 No: 0 Abstain: 0 Inv: 0

APPOINTMENT OF SUBCOMMITTEE

Under the relevant legislation, only the Presiding Officers of each secondary corporation are authorised to provide instructions for the primary corporation. However, a subcommittee has been formed to promote transparency and engagement (although it is not legally empowered to make binding decisions on behalf of the Corporation).

The management committee has quarterly meetings, which all subcommittee members are invited to for their input. The current subcommittee is comprised of the following members:

June Sims (41145)
Natasha Green (41145)
Rose-Anne Zappia (41146)
Tony Zhang (41146)
Frank Falco (41146)
Eve Sullivan (41146)
Tim Matthew (41146)

It was agreed to add both Malcolm Germein and Ria Martens

Malcolm & Helen on sub-com

APPOINTMENT OF BODY CORPORATE MANAGER

Resolved that Munro is to be appointed as manager of the Corporation in accordance with the *Community Titles Act 1996 Section 76(9)* and to assist the appointed officer bearers via delegation for the following 12 months; and that the Presiding Officer be authorised to sign the management agreement.

SERVICES COVERED BY ANNUAL MANAGEMENT FEE

See Management Contract of Appointment

The Manager has the functions and duties provided for under the Act including:

Accounting.

- Establish and operate a bank account in the name of the Corporation or a trust account for the Corporation;
- Keep books of account covering all income and expenditure and assets and liabilities of the Corporation;
- Prepare annual financial statements of all income and expenditure and assets and liabilities of the Corporation (the annual accounts);
- Issue notices for fees set and special fees levied by the Corporation;
- Pay invoices on behalf of the Corporation (provided reasonable funds are held by the Corporation);
- Reconciliation of account.

Insurance

- Arrange insurance or renewal only with or through the authorising licensees listed in Clause 1.2 in accordance with the authority(ies) to provide insurance services listed in Clause 1.2, unless the Manager or the Manager's employer holds its own Australian Financial Services Licence covering the provision of the services;
- Arrange a valuation of the cost of reinstatement and replacement of the building/s when requested by the Corporation;
- Prepare and lodge routine insurance claims with insurers/brokers (max. 15 minutes);
- Provide any other insurance services in respect of insurance products offered through the authorising licensees as listed in Clause 1.2, or as otherwise authorised by the Australian Financial Services Licence held by the Manager, or the Manager's employer.

Documentation

- Maintain register of owners' names and addresses;
- Issue all Corporation search certificates and answer reasonable enquiries at the relevant cost of the applicant/enquirer;
- Deal with routine inwards and outward correspondence;
- Keep and supervise the use of the common seal;
- Keep the records of the Owners Corporation including minutes and ballots.

Annual General Meeting

- Convene, submit a budget and financial statement to and record minutes of the Annual General Meeting;
- Attendance at Annual General Meeting may be charged as Additional Services as set out in 2.2;
- Any meeting held outside the Manager's office may attract a fee for travel time as set out in 2.2.

Maintenance

- Arrange for minor (< $1,000 or 15 minutes) repairs and maintenance of Corporation's common property.

Guidance

- Provide guidance to the Corporation to enable the Corporation to carry out and perform its duties and functions, as set out in this clause.

General

- Generally, implement the decisions and instructions of the Corporation with respect to its duties and functions as set out in this contract.

If additional services in Clauses 2.2 and 2.3, and the Special Conditions as stated in the management contract of appointment are provided, they will be charged to the Corporation where applicable. These charges may include government charges, registering as public officer, disbursements, data storage, audit charges and tax document preparation if necessary. These charges will be debited to the Corporation as actually expended.

Motion CARRIED.

Yes: 3 No: 0 Abstain: 0 Inv: 0

INSURANCE

Insurance Details

As per the *Community Titles Act 1996 Section 103(1a) & (2(b,c))* the Corporation must insure the buildings and other improvements (if any) on the common property for the full cost of replacement with new materials. As per Section 104 of the *Community Titles Act 1996*, the Corporation must also hold fidelity guarantee cover and public liability cover, in addition to any other insurance required by the Act, its regulations or the Corporation bylaws.

The Corporation's insurance policy also covers the secondary corporations, being Community Corporations 41144, 41145 & 41146.

In accordance with the *Community Titles Act 1996 Section 81(5, d, iiib)* and the *Community Titles Regulations 2011 Regulation 16*, the current insurance details for the Corporation are included in the table below.

Policy Number	Underwriter	Current To	Risk Type	Coverage Amount
HU0038241	CHU Underwriting Agencies Pty Ltd	15 Apr 2027	Sum Insured	$36,915,000.00
			Loss of Rent/Temp Accom(15%)	$5,537,250.00
			Common Area Contents	$262,500.00
			Public Liability	$20,000,000.00
			Voluntary Workers	$300,000.00 / $3,000.00
			Fidelity Guarantee	$250,000.00
			Office Bearers Legal Liability	$5,000,000.00
			Machinery Breakdown (Over 5Kw)	$100,000.00
			Catastrophe	$11,074,500.00
			Government Audit Costs	$25,000.00
			Lot Owners Fixtures & Improvements	$250,000.00

			Flood	Included
			Appeal Expenses	$100,000.00
			Legal Defence Expenses	$50,000.00
			Extended cover - Rent/Temp Accommodation	$1,661,175.00
			Escalation in Cost of Temp Accommodation	$553,725.00
			Cost of Storage and Evacuation	$553,725.00
TOTAL PREMIUM: $77,197.14				

Munro is qualified to give general advice and information about insurance, not personal advice. If the Corporation requires specialist insurance advice, Munro can refer the Corporation to an insurance advisor. Munro advised the members that they are not qualified to advise on a replacement value and if guidance is required, the advice of a licensed valuer should be obtained. Munro recommends that the Corporation consider undertaking a valuation every 3-5 years to accommodate for market fluctuations, major catastrophe, and legislation changes.

Munro will not be held responsible for the decision of the Corporation relating to the sum insured and will be indemnified by the Corporation in the event a claim is not met in full due to the Corporation being under or uninsured.

Valuation

In accordance with the *Community Titles Act 1996 Section 103(2)*, the Corporation must consider the value of the sum insured to include a total rebuild of the common property. It is stated in the *Community Titles Act 1996 Section 103(3)* that any shortfall resulting in the under insurance must be met by the Corporation members.

Munro advises members that they are not qualified to advise on a replacement value for insurance purposes owners are to be mindful that in case of a major event, council legislative requirements may have changed over the years thus incurring additional costs when rebuilding and if the members are unsure as to what the policy should be renewed for, they should obtain the advice of a valuer.

It is noted that the Corporation's last valuation was completed on 07 Mar 2024 by Acumentis (SA) Pty Ltd with the recommended replacement sum being $36,915,000.00.

Determination of Sums Insured

Resolved that the Corporation confirm, vary or extend the sums insured by a majority vote on the following options.

Motion CARRIED.

Yes: 3 No: 0 Abstain: 0 Inv: 0

Alternatives for Determination of Sums Insured

(Option A) To resolve that the Corporation increase the building sum insured by CPI or 5% (whichever is greater) upon renewal.

(Option B) To resolve that the members consider the current sums insured adequate to cover full replacement value and extend the policy to keep the same upon renewal as per the obligations under the *Community Titles Act 1996*.

(Option C) To resolve that Munro arranges an insurance valuation to be carried out for the Corporation, and that the sums insured amount be set as per the recommended replacement value.

'OPTION C' has been selected with the highest votes.

A: 0 B: 0 C: 3 Inv: 0

Notes

Valuation March '27

Authorised Representatives / Distributors

Munro Property is an Authorised Representative of Corporate Home Unit Underwriting Agencies Pty. Ltd and an Authorised Distributor of Strata Community Insurance Pty Ltd.

Placement of Insurance

Resolved that the Corporation extends the renewal date of the policy to coincide with the Annual General Meeting.

Should no clear instructions be received, in order to remain compliant with legislation and to ensure that the common property remains insured at all times, Munro is authorised to automatically renew the Corporation insurance policy before maturity each year at the limits of cover held by the Corporation.

Motion CARRIED.

Yes: 3 No: 0 Abstain: 0 Inv: 0

General Information

Landlords / Contents Insurance

Munro advises all owners that the Corporation's insurance does not cover the landlord or contents insurance. Each owner is responsible for ensuring that they have cover in place which suits their individual needs. The Corporation's policy also does not include public liability cover for individual units.

Insurance Claims

Owners are advised that any successful claim will attract an excess and will likely affect the premium upon renewal. If a claim is made because of lack of maintenance by the Corporation, the Corporation will be responsible for paying the excess. The owner will generally be responsible for the payment of the excess in all other instances.

Owners are advised that claims made against the Corporation's insurance policy associated with lack of maintenance or naturally occurring deterioration (wear and tear) may be refused by the insurer. The Corporation should ensure that regular repairs and maintenance should be planned and carried out to prevent damage to the common property.

Claims also associated with non-rectification of an insured property defect, error, or omission that you were aware of or should reasonably have been made aware of may also be refused by the insurer.

Owners are further advised that when making a claim against malicious damage, theft, arson etc. a Police Incident Report (PIR) number will be required by the insurer and the report should be made as soon as the insured is aware of the loss.

If owners are unsure as to what is required when making a claim, they are to refer to the insurer's Product Disclosure Statement (PDS).

ALTERATIONS, ADDITIONS & APPROVALS

As of the agenda issuance, no applications have been submitted for consideration.

Owners are advised that Corporation approval may be required for certain things including (but not limited to) prescribed works, pets, and exclusive use of common property. Some approvals require the passing of a special or unanimous resolution and cannot be considered unless the exact wording of the proposal is included in the agenda.

"Prescribed work" in relation to a unit means:
(a) the erection, alteration, demolition or removal of a building;
(b) the alteration of the external appearance of a building.

If owners are unsure if Corporation approval is required, they are to contact Munro for further clarification.

COMMON PROPERTY MAINTENANCE
Cleaning/Caretaking (Business Arising)

Munro advised that the Corporation currently engages CBR Property Maintenance for cleaning and general duties. The existing contract expires in February 2027, and $65,000 (excluding GST) has been allocated in the proposed budget for this service.

It was agreed to continue with this service.

The manager advised that a rat had recently been spotted on the third level. The cleaners have had a good look around but can't find any evidence of the rat or a nest. It was agreed that the manager will contact residents to inspect their front courtyard areas for any evidence of rodent activity.

Entrance Gates (Business Arising)

Resolved that the Corporation continues with the annual service of both automatic carpark gates with Total Gates & Automation. $700 (excluding GST) has been allocated in the proposed budget for this service.

Motion CARRIED.

Yes: 3	No: 0	Abstain: 0	Inv: 0

Entrance Door (Business Arising)

The manager advised he is currently arranging an alternative contractor to attend to the regular door maintenance.

Testing of Backflow Prevention Valve (Business Arising)

Scheduled each December.

Atrium Issues (Business Arising)

Repair of tiling to be completed. It was noted that it had been agreed at the 41146 AGM that the corporation should engage an engineer to inspect and make recommendations for repair of the cracked grouting and misplaced tiles, noting that the penetrations of the walkway posts had not been sealed at the bottom. An engineer may be able to confirm whether this is a building defect that the corporation can claim under statutory warranty.

Window / Facade Cleaning

Scheduled week of 19th October. Manager to follow up.

Stairwell & Lift Security
As discussed at the 41146 AGM, the manager will investigate options to secure the stairwells and lifts from the carpark such that fob or key access is required.

Emergency Works

In the event of a property emergency, Munro is to be contacted in the first instance on 08 8132 2000. In the event of after-hours emergencies, the call will be directed to HPG Insurance & Maintenance Works. Please note that this service is above and beyond the standard service provided and will incur additional charges at an hourly rate.

If the works are not deemed an emergency or are determined to be the responsibility of the owner, costs will be passed to the owner for recovery.

GENERAL BUSINESS

Waste Management (Business Arising)

The manager noted that it had been expected that council will be proceeding with collection in the second half of this year, following acceptance of the waste management plan and confirmation from East Waste. NPSP Council is yet to notify the manager of when this will be starting. The manager will follow up again.

EV Charging (Business Arising)

As with the secondary AGM's, it was agreed that further discussion about EV installation be put on the backburner for now as there is little interest from the owners at this stage.

Member Register

To ensure you receive all communications from the corporation, please provide Munro Property with a valid email address and notify them promptly of any changes to your contact information.

The members register is a confidential document and distribution of this register must comply with the *Privacy Act 1988*. Requests for access to other members' details should be directed in writing to the secretary of the Corporation. If you prefer not to have your details circulated to other owners, please inform Munro Property in writing.

Owners are reminded that correspondence and financial records are available for inspection by appointment during regular business hours at the offices of Munro Property.

BUDGET & CONTRIBUTIONS

Review & Acceptance of Administration Fund

Resolved, in accordance with the *Community Titles Act 1996 Section 116*, that the proposed administration budget and consequently the annual contributions being $230,000.00 + GST be accepted.

Note: It was agreed that the proposed waste collection costs be increased from $2,000 to $12,000 due to the delay in the uptake of council collection.

Administration funds are collected to pay recurrent expenditure of the Corporation such as the insurance premium.

Motion CARRIED.

Yes: 3	No: 0	Abstain: 0	Inv: 0

Review & Acceptance of Sinking Fund

Resolved, in accordance with the *Community Titles Act 1996 Section 116*, that the proposed sinking fund budget and consequently the annual contributions being $35,096.99 + GST be accepted.

A community corporation requires a sinking fund under the *Community Titles Act 1996 Section 116 (3)*. Non-recurrent expenditure must be made from the sinking fund and all other recurrent expenditure of the corporation must be made from the administrative fund.

The sinking fund's purpose is not to offset recurrent expenditure of the Corporation (unless instructed so by the elected representatives) and is additional to the above administration budget.

Motion CARRIED.

Yes: 3	No: 0	Abstain: 0	Inv: 0

Contributions

Both contributions are to be divided by lot entitlement and paid in quarterly instalments.

Forward Budget

Sinking fund report prepared by Acumentis in Dec. 2024.

In accordance with the *Community Titles Act 1996 Section 113(1aa)* and the *Community Titles Regulations 2001 Regulation 18A*, corporations that are 7-20 lots, with improvements (including buildings or other structures) on the common property insured for $100,000 or more, a 3-year forward budget must be presented at each Annual General Meeting. This budget must include any proposed expenditure (other than ongoing costs) for a 3-year period.

Corporations that are 20+ lots, with improvements (including buildings or other structures) on the common property insured for $100,000 or more, must present a 5-year forward budget at each Annual General Meeting. This budget must include any proposed expenditure (other than ongoing costs) for a 5-year period.

Corporations with less than 7 lots or a common property insurance value of less than $100,000 are exempt from providing a forward budget.
Munro recommends the Corporation utilise the services of qualified asset surveyors to provide this report should one be required.

Resolved to get an update sinking fund report prior to next year's AGM.

Motion CARRIED.

Yes: 3	No: 0	Abstain: 0	Inv: 0

UNPAID LEVIES POLICY
Approval of Debt Recovery Process for Arrears

Resolved as per the *Community Titles Act 1996 Section 114(8),* which provides that "a contribution, instalment or interest may be recovered as a debt", the Corporation hereby adopts (or reaffirms, where previously adopted) the following debt recovery policy:

- For levies unpaid 14 days after their due date, owner/s will receive a reminder letter and a text message (stage 1).
- For levies unpaid 60 days after their due date and greater than $50.00, the owner/s will receive a final notice outlining the cost associated with transferring the recovery to a lawyer and a text message (stage 2, cost $55.00).
- For levies unpaid 90 days after their due date and greater than $500.00, the owner/s will receive a notice outlining that the recovery of overdue levies will be transferred to a solicitors' office specialising in debt recovery (stage 3, cost $150.00).

Munro is to be contacted if an owner is having difficulty paying on time, so fees are minimised or negotiated, interest charged may be waived if an adequate payment plan is maintained and adhered to.

Motion CARRIED.

Yes: 3	No: 0	Abstain: 0	Inv: 0

Approval of Recovery of Debt Collection Fees

Resolved unanimously that all fees incurred by the Corporation associated with the debt recovery process (including, but not limited to, solicitors' fees and court costs) will be payable by the owner, recovered by the action and applied to the lot owner's account.

As per the *Community Titles Act 1996*, a unanimous resolution cannot pass if any votes are cast against it. Members are advised that should the motion be defeated, it may hinder the Corporation's ability to recoup fees associated with debt recovery.

Should the motion carry, all costs initially will need to be met by the Corporation but will be recovered by the action and applied to the lot owner's account.

Motion CARRIED.

Yes: 3	No: 0	Abstain: 0	Inv: 0

Interest Charged on Overdue Accounts

Resolved that the Corporation resolve to adopt, or (where previously adopted) reaffirm, an interest rate of 15% per annum to be applied to contributions in arrears, in accordance with the Act.

As per the *Community Titles Act 1996 Section 14(b),* the Corporation may "fix (in accordance with the regulations) interest payable in respect of a contribution, or an instalment of a contribution, that is in arrears."

Motion CARRIED.

Yes: 3	No: 0	Abstain: 0	Inv: 0

APPOINTMENT OF PUBLIC OFFICER

Resolved that Mr Joshua Baldwin of Munro act as Public Officer as defined under the *Income Tax Assessment Act 1936*.

Under the *Income Tax Assessment Act 1936,* a person is required to be nominated to act as public officer for the Corporation. An owner can fill this position however this can present issues should ownership of the lot change at any time.

Motion CARRIED.

Yes: 3	No: 0	Abstain: 0	Inv: 0

ENGAGEMENT OF AUDITOR

Resolved as per the *Community Titles Act 1996 Section 138* that NRM Johnson be engaged to audit the annual statement of accounts.

NRM Johnson is a registered company auditor within the meaning of the *Corporations Act 2001* of the Commonwealth.

Motion CARRIED.

Yes: 3	No: 0	Abstain: 0	Inv: 0

NEXT MEETING DATE & MEETING CLOSURE

The next AGM will be held in mid-late August 2027. Details will be confirmed closer to the time.

Meeting Close

The meeting closed at 06:06 PM.

Approved Budget
to apply from 01/07/2026

Community Corporation No. 41143 Inc.

La Verde (Primary), 56-60 King William Street, KENT TOWN SA 5067

Administrative Fund

	Approved budget
Revenue	
Levies Due (Special)--Admin	30,000.00
Levies Due--Admin	230,000.00
Recovery--Lift	21,000.00
Total revenue	281,000.00
Less expenses	
Admin - Contractor Compliance Management	273.84
Admin--Accounting--Tax Return	268.00
Admin--Auditors--Audit Services	200.00
Admin--Bank Charges--Account Fees	20.00
Admin--Consultant Fees	12,818.18
Admin--Consultant--BAS Prep. & Lodgement	621.00
Admin--Consultant--Comms/Data/Technology	3,272.72
Admin--Consultant--Meeting Fee	1,000.00
Admin--Consultant--Public Officer Fee	100.00
Admin--Meeting Room Expenses	220.00
Admin--Telephone Charges--Fire Protection	1,480.00
Contingency	5,000.00
Insurance--Premiums	72,000.00
Maint Bldg - Automatic Doors	400.00
Maint Bldg--Building Repairs--General	1,000.00
Maint Bldg--Caretaking	65,000.00
Maint Bldg--Cleaning	2,000.00
Maint Bldg--Electrical--Repairs	454.55
Maint Bldg--Fire Protection	2,500.00
Maint Bldg--Fire Protection--Contract	6,000.00
Maint Bldg--Fire Protection--MFS Monitoring	1,120.00
Maint Bldg--Gate/Roller Door--Repair	500.00
Maint Bldg--Gates	700.00
Maint Bldg--Lift	1,500.00
Maint Bldg--Lift--Maintenance Contract	10,500.00
Maint Bldg--Lift--Registration Fees	90.91
Maint Bldg--Plumbing	500.00
Maint Grounds - Garden maintenance	12,000.00
Utility--Electricity	14,000.00
Utility--Waste Management	2,000.00
Utility--Water & Sewerage	1,000.00

Total expenses	218,539.20
Surplus/Deficit	62,460.80
Opening balance	(44,366.46)
Closing balance	$18,094.34
Total units of entitlement	10000
Levy contribution per unit entitlement	$25.30
Budgeted standard levy revenue	230,000.00
Add GST	23,000.00
Amount to raise in levies including GST	$253,000.00

Sinking Fund

	Approved budget
Revenue	
Levies Due--Sinking	35,096.99
Total revenue	35,096.99
Less expenses	
Maint Bldg--Fire Protection	4,000.00
Maint Bldg--General Replacement	3,000.00
Maint Bldg--Plant & Equipment	1,200.00
Total expenses	8,200.00
Surplus/Deficit	26,896.99
Opening balance	101,116.16
Closing balance	$128,013.15
Total units of entitlement	10000
Levy contribution per unit entitlement	$3.86
Budgeted standard levy revenue	35,096.99
Add GST	3,509.70
Amount to raise in levies including GST	$38,606.69

Adelaide Office
136 The Parade
Norwood
South Australia 5067

08 8132 2020
info@munroproperty.com.au

Munro Property Group Pty Ltd
ABN 41 007 878 079

www.munroproperty.com.au

Insurance RENEWED – Disclosure Advice

Tuesday, April 14, 2026

This document has been prepared in line with the Strata Community Association (SCA) Best Practice Guide on disclosure 2024

The insurance renewal for your corporation was PAID on: **14/04/2026**

Attached is:

- Insurance renewal certificate
- The SCA Best Practice Insurance Guide – Consumer Fact Sheet

Original Disclosure Date: **14/04/2026**

Special Notes	
Renewal Date Adjustment	NO
Endorsements	NO

Valuation	Date: 20/03/24	Amount: $36,915,000	Valuer: Acumentis

In accordance with the recommendations set forth by the Strata Community Association Australia, we are required to provide all our clients with an Insurance Disclosure Form. This form is designed to give you comprehensive information about your current insurance policies, including coverage details, premiums, and commissions paid.

Munro Property Group have always declared in our minutes and management agreements that we receive commissions from insurers who we deal directly with. The invoices for these insurance policies also have had, for a number of years, the amount of commission earned on the policies.

What You Need to Do:

1. **Review the Form:** Please take a moment to carefully review the attached Insurance Disclosure Form.
2. **Contact Us with Questions:** If you have any questions or require further clarification regarding the information provided, or refer to the attached Frequently Asked Questions page supplies by the SCA.

INSURANCE RENEWED DISCLOSURE

Name: Community Corporation 41143 Inc **Policy No: HU0038241**

Period of Insurance: 15/04/2026 to 15/04/2027

	Previous Premium	**Renewed Premium**
Building Sum Insured	$36,915,000.00	$36,915,000.00
Insurer	CHU Underwriting Agencies Pty Ltd	CHU Underwriting Agencies Pty Ltd
Total Premium	$67,979.49	$77,197.14

	Previous Premium	**Renewed Premium**
Insurance Provider	CHU	CHU
Product Disclosure & Financial Services Link (s)	https://chucom.au	https://chu.com.au
1. Base Premium (includes commission)	$55,540.13	$63,044.33
2. Government Emergency Service Levy	Nil.	Nil.
3. Stamp Duty	$6,720.35	$7,628.37
4. Underwriting Agency Fee	$150.00	$200.00
5. Broker Fee	$0.00	$0.00
6. GST	$5,569.01	$6,324.44
Total insurance costs including GST	**$67,979.49**	**$77,197.14**
7. Commission	$11,108.04	$12,608.87
8. Allocation of Remuneration excluding GST		
Munro Property share of remuneration	100%	100%
Broker share of remuneration	N/A	N/A
Please list in detail here any other forms of remuneration related to this transaction.	**NONE**	
Please detail here any conflicts of interest that exist in the placement of this insurance and how they are managed.	**NONE TO REPORT**	
We, **Munro Property Group** are acting in the best interests of the client in the presentation of this quotation. Signature: Name: **Jason Nash** For and on behalf of Munro Property.		
Total Strata Insurance Remuneration	**$67,979.49**	**$77,197.14**

PREPARED BY MUNRO PROPERTY GROUP PTY LTD

Commercial Property
Sales & Marketing
Leasing
Management

Residential Property
Sales & Marketing
Leasing
Management

Body Corporate
Management
Consulting

Property Trust
Acquisitions
Administration

Property Development
Strategic Planning
Feasibilities
Project Marketing
Joint Ventures

Level 13, 431 King William Street
Adelaide SA 5000

Renewal Schedule

CHU Residential Strata Insurance Plan

Policy Number	**HU**0038241
Policy Wording	CHU RESIDENTIAL STRATA INSURANCE PLAN
The Insured	COMMUNITY CORPORATION NO. 41143. 41144, 41145 & 41146 INC.
Situation	54-60 KING WILLIAM STREET KENT TOWN SA 5067
Policy Period	15/04/2026 to 15/04/2027 at 4:00pm

Sections

Section 1 – Insured Property

Building: $36,915,000
Common Area Contents: $262,500
Loss of Rent & Temporary Accommodation (total payable): $5,537,250
Lot Owners' Fixtures and Improvements (per lot): $250,000

Optional Extensions:
Catastrophe Insurance Sum Insured: $11,074,500
- Extended Cover - Loss of Rent & Temporary Accommodation: $1,661,175
- Escalation in Cost of Temporary Accommodation: $553,725
- Cost of Removal, Storage and Evacuation: $553,725

Machinery Breakdown: $100,000
Lot Owners' Contents inclusion (per lot): Not Selected

Section 2 – Liability to Others

Sum Insured: $20,000,000

Section 3 – Voluntary Workers

Death: $300,000
Total Disablement: $3,000 per week

Section 4 – Fidelity Guarantee

Sum Insured: $250,000

Section 5 – Office Bearers' Legal Liability

Sum Insured: $5,000,000

Section 6 – Government Audit Costs and Legal Expenses

Government Audit Costs: $25,000
Appeal expenses – common property health & safety breaches: $100,000
Legal Defence Expenses: $50,000

Flood Cover is included.

The contract of insurance is arranged by CHU Underwriting Agencies Pty Ltd (ABN 18 001 580 070, AFSL 243261) on behalf of the insurer: QBE Insurance (Australia) Limited (ABN 78 003 191 035, AFSL 239545).

Excesses

Section 1 – Insured Property
Standard: $2,000

Optional Extensions – Excesses
Machinery Breakdown
Standard: $500

Section 2 – Liability to Others

Other excesses payable are shown in the Policy Wording.

Premium

Base Premium	$63,044.33
Levies	$0.00
GST	$6,324.44
Stamp Duty	$7,628.37
Admin Fee	$200.00
Total Payable	**$77,197.14**

MUNRO PROPERTY GROUP BODY CORPORATE

Commission	$12,608.87
Commission GST	$1,260.88

Date of Issue 14/04/2026

Refer to **Important Information** below for excess descriptions and confirmation of cover. Please refer to your Product Disclosure Statement and Policy Wording QM562-0725 for further terms and conditions that apply.

Important Information

Confirmation of cover

The cover provided by this schedule forms part of your contract of insurance and is in force for the Period of Insurance shown. Cover is subject to the policy terms, conditions, limitations and exclusions. Please refer to your policy document and PDS.

Your duty when you renew your policy

This document sets out the information we hold about you, your property and your policy.

By law, you must take reasonable care not to make a misrepresentation. This means before renewal, you must review this information and tell us if anything is wrong or if there have been any changes. Some types of changes may impact our offer of renewal terms.

If we do not hear from you and you renew your policy, this means you agree that the information you have previously provided to us is correct and that nothing has changed.

If you do not tell us about anything that has changed, or if any of the information is misleading, incomplete, inaccurate or fraudulent we may reduce or not pay a claim, cancel your policy or treat it as if it never existed.

If anything is unclear, please contact us.

Excesses – explanatory notes

Whenever an Excess and amount is shown in the Schedule or Policy Wording, You must pay or contribute the stated amount for each claim You make against the Insured Event.

Water Damage Excess

The following Excess will apply to Section 1 – Insured Property for loss or damage caused by:

a. Damage from bursting, leaking, discharging or overflowing of tanks, apparatus or pipes
b. Rainwater

The additional Excess payable will be shown on Your Policy Schedule.

Other excesses apply. These are listed on your Policy Schedule or described in the Policy Wording.

Best Practice – Strata Insurance Disclosure

Consumer Fact Sheet

What is Best Practice for strata insurance disclosure, and what is SCA doing for consumers?

- **Building understanding** – To ensure strata committees understand their choices, options and fee breakdowns as they relate to their insurance policy.
- **Positive consumer outcomes** – To improve relationships, conversations, understanding and outcomes for consumers of strata insurance.
- **Transparency and choice** – To raise the bar of strata insurance transparency, choice and communication.
- **Timely communication** – To provide clear and timely communication, with a minimum of three touch points for communication of strata insurance placement between strata manager and committee – at time of quote, invoice and the AGM.
- **Concise information** – To provide clear and concise information that explains in simple terms the roles and responsibilities of the strata manager, broker and insurer and the strata insurance process.
- **Remuneration disclosure** – FAQs and information about who is paid what, and why, in dollar values and included with invoices, quotes and at the AGM.

SCA's 3 Principles of Best Practice Strata Insurance Disclosure

SCA members will be delivering transparent, timely clear information to consumers based on the following three principles:

DISCLOSE

Strata committees can clearly see what actions are being taken, the parties involved and all remuneration for their insurance policy.

DOCUMENT

Strata committees understand their choices, options and fee breakdowns as they relate to their insurance policy.

COMMUNICATE

Strata committees receive clear, timely, accurate information about their insurance policy.

Standardisation of the information provided on quotes and invoices, such as on the SCA template below, will ensure that strata committees are provided with transparent, timely information to inform their choices.

Invoice template

Itemised Insurance Costs	Previous year *Name*	Current year *Name*
Base Premium Gross (includes commission if applicable)		
ESL or FSL		
Stamp Duty		
Underwriting Agency Fee		
Broker Fee		
GST – all items		
Total insurance costs including GST		
Commission		
Allocation of strata insurance remuneration (where applicable) • Strata manager • Broker		
Conflicts of interest		
Best interests declaration		
Total strata insurance remuneration		

Best Practice – Strata Insurance Disclosure

Consumer Fact Sheet - FAQ

strata community association®

What do strata managers do in relation to strata insurance and why do they receive remuneration?

Strata managers undertake or participate in 47 different services in relation to strata insurance to their clients, including, but not limited to:

- Quotation
- Procurement
- Placement and renewal
- Claims management
- Insurance record keeping
- Correspondence
- Negotiation and liaison
- Advice based on insurance knowledge

The value of strata manager and insurance brokers in the insurance process

- The knowledge and experience the strata manager holds of the insurance landscape as well as the building is an asset to the strata committee and the policy outcome.
- Increased legislative and regulatory requirements, along with buildings which are often complex, mean strata manager and broker expertise is incredibly valuable.
- Insurance brokers provide general and personal advice, drawing on their specialist skills and working closely with the strata manager when involved.
- Specialist brokers work to understand the unique aspects of the building being insured and provide a tailored quote based on the building's particular set of circumstances.

What is strata insurance remuneration?

Strata insurance remuneration is the total value of the remuneration paid to the parties involved in the process of insuring a strata building.

Who is paid strata insurance remuneration?

The two most common parties who receive remuneration will be the strata manager and the insurance broker, however who receives remuneration is based on the arrangement the strata committee chooses:

- Many use a strata manager who works closely with one or more insurance brokers.
- Some contact an independent broker to aid their insurance choice.
- Some strata communities choose to take out insurance directly with insurers.

Do strata communities have choice about remuneration models?

Yes. Strata communities have the choice of several remuneration models, and it is advisable if they wish to alter their current remuneration model to discuss it with their strata manager to fully understand their personal circumstances.

Are all parties who are remunerated as part of the insurance process listed in this section?

Yes. No matter which remuneration model is chosen, all parties who are involved in the insurance process will usually receive remuneration, and you will receive details about how much remuneration they receive.

What about potential conflicts of interest or business arrangements?

If any parties to the insurance process have conflicts of interest, or are receiving other remuneration as part of the transaction, they will list it clearly.

Scan this code to access the guide.

Munro Property Group Pty Ltd
136 The Parade NORWOOD SA 5067
08 8132 2000
bc@munroproperty.com.au
www.munroproperty.com.au

INTERIM REPORTS

for the financial year to 30/09/2026

Community Title Scheme 41143

La Verde (Primary), 56-60 King William Street, KENT TOWN
SA 5067

Manager: Jason Nash

	Page
Statement of Financial Position	1
Statement of Financial Performance	2

Statement of Financial Position

As at 23/09/2026

Munro Property Group Pty Ltd
136 The Parade NORWOOD SA 5067
08 8132 2000
bc@munroproperty.com.au
www.munroproperty.com.au

Community Corporation No. 41143 Inc.

La Verde (Primary), 56-60 King William Street, KENT TOWN SA 5067

	Current period
Owners' funds	
Administrative Fund	
Operating Surplus/Deficit--Admin	(38,944.86)
Owners Equity--Admin	(31,878.91)
	(70,823.77)
Sinking Fund	
Operating Surplus/Deficit--Sinking	0.00
Owners Equity--Sinking	168,106.85
	168,106.85
Net owners' funds	$97,283.08
Represented by:	
Assets	
Administrative Fund	
Cash at Bank--Admin	(83,033.73)
	(83,033.73)
Sinking Fund	
Cash at Bank--Sinking	99,968.87
	99,968.87
Unallocated Money	
	0.00
Total assets	16,935.14
Less liabilities	
Administrative Fund	
Admin-- GST Holding	(2,675.60)
Creditors--Other--Admin	2,953.19
	277.59
Sinking Fund	
Sinking -- GST Holding	(1,147.29)
	(1,147.29)
Unallocated Money	
	0.00
Total liabilities	(869.70)
Net assets	$17,804.84

Munro Property Group Pty Ltd
136 The Parade NORWOOD SA 5067
08 8132 2000
bc@munroproperty.com.au
www.munroproperty.com.au

Community Corporation No. 41143 Inc.

La Verde (Primary), 56-60 King William Street, KENT TOWN SA 5067

Administrative Fund

		Current period 01/07/2026-23/09/2026
Revenue		
145118	Recovery--Lift	15,299.48
145104	Recovery-Owner Fobs	152.00
	Total revenue	15,451.48
Less expenses		
153820	Admin - Contractor Compliance Management	68.46
150900	Admin--Accounting--Tax Return	281.82
150800	Admin--Auditors--Audit Services	210.00
151401	Admin--Bank Charges--Account Fees	5.40
154000	Admin--Consultant Fees	3,204.54
150600	Admin--Consultant--BAS Prep. & Lodgement	157.27
153809	Admin--Consultant--Comms/Data/Technology	818.16
151605	Admin--Consultant--Public Officer Fee	22.50
157001	Admin--Telephone Charges--Fire Protection	377.72
164750	Maint Bldg - Automatic Doors	105.00
167200	Maint Bldg--Building Repairs--General	1,604.22
162900	Maint Bldg--Caretaking	18,050.37
164800	Maint Bldg--Electrical--Repairs	454.73
165800	Maint Bldg--Fire Protection	5,171.00
165801	Maint Bldg--Fire Protection--Contract	1,487.49
166600	Maint Bldg--Gate/Roller Door--Repair	3,116.25
166700	Maint Bldg--Gates	3,223.36
170200	Maint Bldg--Lift	5,125.36
172200	Maint Bldg--Plumbing	265.00
173000	Maint Bldg--Security--General	65.00
170600	Maint Bldg--Security--Locks	219.50
173800	Maint Bldg--Signs & Notice Boards	220.00
178400	Maint Grounds - Garden maintenance	1,490.91
190200	Utility--Electricity	2,835.42
190800	Utility--Rubbish Removal	120.00
191000	Utility--Waste Management	5,361.11
191200	Utility--Water & Sewerage	335.75
	Total expenses	54,396.34
Surplus/Deficit		(38,944.86)
	Opening balance	(44,366.46)

Administrative Fund

	Current period 01/07/2026-23/09/2026
Closing balance	-$83,311.32

Sinking Fund

	Current period 01/07/2026-23/09/2026
Revenue	
Total revenue	0.00
Less expenses	
Total expenses	0.00
Surplus/Deficit	0.00
Opening balance	101,116.16
Closing balance	$101,116.16

MUNRO™ Property Group Pty Ltd
ABN 41 007 878 079

t 08 8132 2000

Level 1, Suite 3, 136 The Parade
Norwood SA 5067
corporations@munroproperty.com.au
munroproperty.com.au

MINUTES OF THE ANNUAL GENERAL MEETING OF COMMUNITY CORPORATION NO. 41143 INC.

Meeting in accordance with *The Community Titles Act 1996*

La Verde (Primary)
56-60 King William Street, KENT TOWN, SA, 5067

In accordance with the *Community Titles Act 1996 Section 81(1)* the Officers of the Corporation called the Annual General Meeting.

DATE: **24 April 2024**
TIME: **06:00 PM**
LOCATION: **Videoconference**

Attendance

Lot 1002	Community Corporation No. 41145 Inc.	Represented by Mr Paul Garner

Others in attendance
Jason Nash & Alice Rogers-Ross on behalf of Munro.
June Sims, guest of Paul Garner
Lisa Scheepers, guest of Paul Garner

Proxy Voting
Nil.

Quorum
In accordance with *The Community Titles Act 1996 Section 83(4)*, a quorum is determined by dividing the number of persons entitled to attend and vote (financial members) at the meeting by two, disregarding any fraction and adding one. At the time of the meeting, a quorum was not achieved with only 1 of the 3 financial lots represented, therefore a new time and date were elected, and the meeting was adjourned.

MINUTES OF THE ANNUAL GENERAL MEETING OF COMMUNITY CORPORATION NO. 41143 INC.

Meeting in accordance with *The Community Titles Act 1996*

La Verde (Primary)
56-60 King William Street, KENT TOWN, SA, 5067

In accordance with *The Community Titles Act 1996 Section 81(1)* the Officers of the Corporation called the Annual General Meeting.

DATE: **8 May 2024**

TIME: **06:00 PM**
LOCATION: **Videoconference**

Attendance

Lot 1002	Community Corporation No. 41145 Inc.	Represented by Paul Garner
Lot 1003	Community Corporation No. 41146 Inc.	Represented by Tony Zhang

Others in attendance
Jason Nash & Alice Rogers-Ross on behalf of Munro.
Lisa Scheepers, guest of Tony Zhang
June Sims, guest of Paul Garner

Proxy Voting
Nil.

Quorum
In accordance with *The Community Titles Act 1996 Section 83(4)*, a quorum is determined by dividing the number of persons entitled to attend and vote (financial members) at the meeting by two, disregarding any fraction and adding one. At the time of the meeting, 2 of the 3 financial lots were represented, therefore the meeting opened at 06:24 PM.

Motions Resolved at the Reconvened Meeting (08 May 2024)

MEETING OPENING, APPOINTMENT OF MEETING CHAIRPERSON & MINUTE SECRETARY

Resolved that Jason Nash of Munro would assist the Presiding Officer by conducting the meeting; and Alice Rogers-Ross of Munro would assist the Secretary in the recording of minutes as per *The Community Titles Act 1996 Section 83(3a).*

Motion CARRIED.

Yes: 2	No: 0	Abstain: 0	Inv: 0

DECLARATION OF INTEREST

In accordance with *The Community Titles Act 1996 Section 85*, it is a legal requirement for members to make known to the meeting any direct or indirect financial interest in matters to be voted upon at a properly convened meeting. No declarations were made.

CONFIRMATION OF PREVIOUS MINUTES

Resolved, in accordance with *The Community Titles Act 1996 Section 81(5a)*, that the minutes of the last Annual General Meeting held on the 1st of March 2023 be confirmed as a true record of the proceedings of that meeting.

Motion CARRIED.

Yes: 2	No: 0	Abstain: 0	Inv: 0

ACCEPTANCE OF FINANCIAL STATEMENTS

Resolved, that this matter be deferred until an audit is carried out of the full financial statements for the year ending 30th of November 2023.

Motion CARRIED.

Yes: 2	No: 0	Abstain: 0	Inv: 0

This matter will be revisited at the next General Meeting of the Corporation.

ELECTION OF OFFICE BEARERS

The Chairperson declared the positions vacant and called for nominations for Presiding Officer, Secretary and Treasurer. Resolved in accordance with *The Community Titles Act 1996 Section 76*, that the Corporation fill the positions as below:

Presiding Officer – Paul Garner (Presiding Officer of Community Corporation No. 41145 Inc.)
Secretary – Tony Zhang (Presiding Officer of Community Corporation No. 41146 Inc.)
Treasurer - Tony Zhang (Presiding Officer of Community Corporation No. 41146 Inc.)

Motion CARRIED.

Yes: 2	No: 0	Abstain: 0	Inv: 0

As per *The Community Titles Act 1996 Section 92*, If a vacancy arises in any of the positions, the position will need to be filled at a General Meeting, or, if the corporation has a management committee, the committee may, by ordinary resolution, appoint a lot owner to fill the vacancy.

APPOINTMENT OF MANAGEMENT COMMITTEE

The Community Titles Act 1996 Section 92(2) states that: Subject to this Act and to any limitations imposed by the Corporation or by the bylaws of the community scheme, a management committee has full power to transact any business of the corporation.

Munro recommends the appointment of a management committee to ensure that the management consultant has the required directives from the representatives to carry out its business as it sees fit.

Resolved the appointment of a management committee consisting of the office bearers; and that the management committee be authorised to give consent for each occurrence of unplanned maintenance work that may occur throughout the year.

Motion CARRIED.

Yes: 2 No: 0 Abstain: 0 Inv: 0

The management committee has the authority to approve quotes, some minor additions, alterations, and approvals, however may (at its discretion) call a General Meeting to consult with all owners on any matter.

Owners are reminded that the management committee does not have the power to authorise anything for which a special or unanimous resolution of the Corporation is required by the Act or the bylaws.

Future Committee Meetings

It was agreed to hold quarterly committee meetings, the proposed dates are as follows:

Thursday 6 June at 6 PM (Videoconference)
Thursday 5 September at 6 PM (Videoconference)
Thursday 5 December at 6 PM (Videoconference)

Munro advises that additional fees may apply if a representative is invited to attend committee meetings, assisting with chairing, and recording the minutes.

Should a management consultant not be required, it is the responsibility of the Secretary to ensure that detailed minutes are taken and provided to Munro to hold on file and carry out any requests in accordance with the contract of appointment.

Subcommittee

It is noted that in the past, the management committee had several delegates from the secondary corporations appointed, however, legislation mandates that only one representative from each lot may be appointed to the committee.

It was therefore agreed that a subcommittee would be appointed at the next committee meeting, consisting of the following members (subject to their acceptance):

Paul Garner (41145)
Rose-Anne Zappia (41146)
Frank Falco (41146)
Denice Hansen (41144)
Tony Zhang (41146)
June Sims (41146)
Eve Sullivan (41145)
Grant Piggott (41146)
Jodie Lutz & Manuel Quinquis (41146)
Lisa Scheepers (41146)

APPOINTMENT OF BODY CORPORATE MANAGER

Resolved that Munro is to be appointed as manager of the Corporation in accordance with *The Community Titles Act 1996 Section 76(9)* and to assist the appointed officer bearers via delegation for the following 12 months; and that the Presiding Officer be authorised to sign the management agreement.

Motion CARRIED.

Yes: 2 No: 0 Abstain: 0 Inv: 0

SERVICES COVERED BY ANNUAL MANAGEMENT FEE

See Management Contract of Appointment

The Manager has the functions and duties provided for under the Act including:

Accounting

- Establish and operate a bank account in the name of the Corporation or a trust account for the Corporation;
- Keep books of account covering all income and expenditure and assets and liabilities of the Corporation;
- Prepare annual financial statements of all income and expenditure and assets and liabilities of the Corporation (the annual accounts);
- Issue notices for fees set and special fees levied by the Corporation;
- Pay invoices on behalf of the Corporation (provided reasonable funds are held by the Corporation);
- Reconciliation of account.

Insurance

- Arrange insurance or renewal only with or through the authorising licensees listed in Clause 1.2 in accordance with the authority(ies) to provide insurance services listed in Clause 1.2, unless the Manager or the Manager's employer holds its own Australian Financial Services Licence covering the provision of the services;
- Arrange a valuation of the cost of reinstatement and replacement of the building/s when requested by the Corporation;
- Prepare and lodge routine insurance claims with insurers/brokers (max. 15 minutes);
- Provide any other insurance services in respect of insurance products offered through the authorising licensees as listed in Clause 1.2, or as otherwise authorised by the Australian Financial Services Licence held by the Manager, or the Manager's employer.

Documentation

- Maintain register of owners' names and addresses;
- Issue all Corporation search certificates and answer reasonable enquiries at the relevant cost of the applicant/enquirer;
- Deal with routine inwards and outward correspondence;
- Keep and supervise the use of the common seal;
- Keep the records of the Owners Corporation including minutes and ballots.

-

Annual General Meeting

- Convene, submit a budget and financial statement to and record minutes of the Annual General Meeting;Attendance at Annual General Meeting may be charged as Additional Services as set out in 2.2;
- Any meeting held outside the Manager's office may attract a fee for travel time as set out in 2.2;

Maintenance

- Arrange for minor repairs and maintenance of Corporation's common property.

Guidance

- Provide guidance to the Corporation to enable the Corporation to carry out and perform its duties and functions, as set out in this clause.

General

- Generally implement the decisions and instructions of the Corporation with respect to its duties and functions as set out in this contract.

If additional services in Clauses 2.2 and 2.3, and the Special Conditions as stated in the management contract of appointment are provided, they will be charged to the Corporation where applicable. These charges may include government charges, registering as public officer, disbursements, data storage, audit charges and tax document preparation if necessary. These charges will be debited to the Corporation as actually expended.

INSURANCE

Review of Insurance

As per *The Community Titles Act 1996 Section 103(1a,b) & (2(b,c))* the Corporation must insure the buildings and other improvements (if any) on the common property for the full cost of replacement with new materials, in addition to the building or buildings divided by the strata plan. As per Section 104 of *The Community Titles Act 1996,* the Corporation must also hold fidelity guarantee cover and public liability cover, in addition to any other insurance required by the Act, its regulations or the Corporation bylaws.

As per *The Community Titles Act 1996 Section 103 & 104*, the community insurance must be for the full cost of replacing the buildings or improvements on the common property and in the case of a strata scheme – the building or buildings divided by the strata plan. *The Community Titles Act 1996 Section 106(2)* states "a person who is required by subsection (1) to insure a building must provide to the community corporation such evidence as is required by the regulations of his or her compliance with that requirement."

In accordance with *The Community Titles Act 1996 Section 81(5, d, iiib)* and *The Community Titles Regulations 2011 Regulation 16*, the current insurance details for the corporation are as follows:

Policy Number	Underwriter	Current To	Risk Type	Coverage Amount
HU0038241-2			Building	$36,915,000.00

	CHU 1 Strata Insurance	15 Apr 2024	Loss of Rent/Temp Accom(15%)	$4,050,000.00
			Common Area Contents	$250,000.00
			Public Liability	$20,000,000.00
			Voluntary Workers	$200,000.00 / $2,000.00
			Fidelity Guarantee	$200,000.00
			Office Bearers Legal Liability	$250,000.00
			Machinery Breakdown (Over 5Kw)	$100,000.00
			Catastrophe	$8,100,000.00
			Government Audit Costs	$25,000.00
			Lot Owners Fixtures & Improvements	$250,000.00
			Flood	Included
			Appeal Expenses	$100,000.00
			Legal Defence Expenses	$50,000.00
TOTAL PREMIUM: $40,777.48				

Munro is an authorised representative of Corporate Home Unit Underwriting Agencies Pty. Ltd and an Authorised Distributor of Strata Community Insurance Pty Ltd.

Owners wanting a copy of the relevant Product Discloser Statement (PDS) or Financial Services Guide (FSG) can download a copy from the relevant insurer's website, or alternatively request one from the Munro office.

Munro is qualified to give general advice and information about insurance, not personal advice. If the Corporation requires specialist insurance advice, Munro can refer the Corporation to an insurance advisor. Munro advised the members that they are not qualified to advise on a replacement value and if guidance is required, the advice of a licensed valuer should be obtained. Munro recommends that the Corporation consider undertaking a valuation every 3-5 years to accommodate for market fluctuations, major catastrophe, and legislation changes.

Munro will not be held responsible for the decision of the Corporation relating to the sum insured and will be indemnified by the Corporation in the event a claim is not met in full due to the Corporation being under or uninsured.

Landlords / Contents Insurance

Munro advises all owners that the Corporation's insurance does not cover the landlord or contents insurance. Each owner is responsible for ensuring that they have cover in place

which suits their individual needs. The Corporation's policy also does not include public liability cover for individual units.

Insurance Claims

Owners are advised that any successful claim will attract an excess and will likely affect the premium upon renewal. If a claim is made because of lack of maintenance by the Corporation, the Corporation will be responsible for paying the excess. The owner will generally be responsible for the payment of the excess in all other instances.

Owners are advised that claims made against the Corporation's insurance policy associated with lack of maintenance or naturally occurring deterioration (wear and tear) may be refused by the insurer. The Corporation should ensure that regular repairs and maintenance should be planned and carried out to prevent damage to the common property.

Claims also associated with non-rectification of an insured property defect, error, or omission that you were aware of or should reasonably have been made aware of may also be refused by the insurer.

Owners are further advised that when making a claim against malicious damage, theft, arson etc. a Police Incident Report (PIR) number will be required by the insurer and the report should be made as soon as the insured is aware of the loss.

If owners are unsure as to what is required when making a claim, they are to refer to the insurer's PDS.

Insurance Valuation & Renewal Instructions

In accordance with *The Community Titles Act 1996 Section 103(2),* the Corporation must consider the value of the sum insured to include a total rebuild of the common property. It is stated in *The Community Titles Act 1996 Section 103(3)* that any shortfall resulting in the under insurance must be met by the Corporation members.

Munro advised the members that they are not qualified to advise on a replacement value for insurance purposes owners are to be mindful that in case of a major event, council legislative requirements may have changed over the years thus incurring additional costs when rebuilding and if the members are unsure as to what the policy should be renewed for, they should obtain the advice of a valuer.

It is noted that the Corporation's last valuation was completed on 07 Mar 2024 by Acumentis (SA) Pty Ltd with the recommended replacement sum being $36,915,000.00. Munro advised the meeting that it had tried to obtain alternative quotes for renewal however, due to the cladding and compressed timber present, Strata Community Insurance had declined to accept the risk.

The management committee is to provide Munro with instructions on the 2024-25 policy closer to renewal.

Motion CARRIED.

Yes: 2	No: 0	Abstain: 0	Inv: 0

ALTERATIONS, ADDITIONS & APPROVALS

Exclusive Use of Common Property - Lot 25 (41146)

To resolve that the owner of lot 25 of Community Corporation No. 41146, be granted exclusive access for a term of five (5) years to the common property marked 'Bike Store D' on the attached plan, for the purposes of ease of access to their allocated carpark.

The management committee have confirmed that this area has never been utilised by the Corporation, nor are there any immediate plans to.

Motion DEFEATED.

Yes: 1 No: 1 Abstain: 0 Inv: 0

It was noted that due to one dissenting vote received from a member of Community Corporation No. 41446 Inc., the motion was defeated.

Explanatory Note
Owners are advised that Corporation approval may be required for certain things including (but not limited to) prescribed works, pets, and exclusive use of common property. Some approvals require the passing of a special or unanimous resolution and cannot be considered unless the exact wording of the proposal is included in the agenda.

"Prescribed work" in relation to a unit means:
(a) the erection, alteration, demolition or removal of a building;
(b) the alteration of the external appearance of a building.
If owners are unsure if Corporation approval is required, they are to contact Munro for further clarification.

COMMON PROPERTY MAINTENANCE

Cleaning / Caretaking

It is noted that the caretaker (Morgan & Hansen Pty Ltd) is no longer offering their services. CBR Property Maintenance has since been engaged, and members praised the current standard of cleaning.

It is also noted that Con's Cutting & Cleaning is engaged every quarter to thoroughly clean the floors. Munro is also to arrange hard rubbish collections periodically as required.

Gardening & Grounds Maintenance

It is noted that the caretaker attends to the regular upkeep of the gardens, and Hedgehogs Gardens (the original installer) attends quarterly to carry out pruning, irrigation repairs, etc.

Entrance Gates

It is noted that the Corporation currently engages Ace Automation for periodic maintenance of the automatic gates. Gate remotes are also arranged through Ace Automation.

It was noted that the gate on the King William Street side of the property is squeaking. Munro is to arrange for Ace Automation to attend.

During the meeting, Ms Scheepers brought up a concern regarding lost remotes and the potential security risk it poses if any resident were to misplace or lose their remote. Munro suggested that upgrading the gate motor to an Airkey system could be a possible solution. This would allow individual Airkeys to be deactivated if they are lost, eliminating the need to replace the entire system. Munro will gather approximate pricing for this solution and present the findings at the next committee meeting.

Entrance Doors

It is noted that the Corporation currently engages Dormakaba to service the automatic door 3 times a year at an annual cost of $270 (ex. GST). The contract for this expires on 1 June 2024. Entrance door fobs are arranged through MetroTech. Members present agreed to renewal the contract upon expiry.

Ms Sims requested that Munro investigate the possibility of changing the fobs as the current ones are prone to breaking. Munro will report its findings at the next committee meeting.

Post Meeting Note: Munro contacted MetroTech who advised that there are no other options for fobs.

Munro advised that a fob register had either not been maintained or was not provided with the handover documents from the previous management. Ms Scheepers recommended that Munro contact the developer as they may have maintained this.

After discussion, members agreed that, in the interest of building security, the fob protocol should be 5 fobs per unit, and operate on a “one in, one out” basis. Munro advised that it has begun a new register, containing the fob numbers that have been issued from its office during its short tenure, but it may take many months to create an operable one from scratch.

General Repairs / Maintenance

To resolve that the caretakers carry out minor repairs where possible and notify Munro when larger repairs and maintenance are required.

Motion CARRIED.

Yes: 2	No: 0	Abstain: 0	Inv: 0

Lift Maintenance / Costs

It is noted that the Corporation has a contract with Schindler Lifts (exp. 14 December 2028) for the maintenance of the lifts. It is further noted that Community Corporation No. 41145 Inc. ("SOHO"), and lots 1, 2 & 3 of Community Corporation No. 41144 Inc. (commercial premises) are exempt from contributing to these costs in accordance with bylaw 43, and the resolution passed at the 2023 Annual General Meeting.

Munro advised that the previous management had raised special levies against those entities for the lift costs, but it was unclear as to the reasoning behind the split, and they also raised the special levies in advance. Munro explained that this approach is problematic for two reasons: Firstly, the split could not be justified if questioned in the future. Secondly, the recovery of costs was based on the projected amount, not the actual expenditure. This method would not account for any increases in service prices or repairs not covered under the contract.

After thorough consideration, it was decided that the costs should be divided based on the below calculation of the lot entitlements. Additionally, the actual cost of lift expenditure should be raised as a recovery against the relevant parties each quarter.

Primary Lot Entitlements
1001 (41144): 1,075 (12.13%)
1003 (41146): 7,785 (87.87%)
Total: 8,860 (100%)

Commercial Lot Entitlements
Lot 4: 1,370 (31.42%)
Lot 5: 1,460 (33.48%)
Lot 6: 1,530 (35.09%)
Total: 4,360 (100%)

Therefore, 41146 will be responsible for 87.87% of the total lift costs, and 41144 will be responsible for 12.13%. The 12.13% will then be recovered against the owners of lots 4, 5 and 6 of 41144 as the percentage of the sum of their lot entitlements.

Munro further advised that they recently received advice from Schindler Lifts that the two lifts are not equipped with dual-SIM diallers as required by law. Resolved that the attached quote from Schindler Lifts for $5,749.70 plus a monthly service fee of $49.50 per lift be accepted; and further resolve to authorise Munro to cancel the current single-SIM dialler phone line with Optus.

Motion CARRIED.

Yes: 2	No: 0	Abstain: 0	Inv: 0

Annual Testing of Backflow Prevention Valves

It is noted that the backflow prevention valves at the property require annual testing by a licenced plumber and a certificate of compliance is to be provided to the Office of Technical Regulator (OTR). Munro has been authorised by the management committee to arrange this annually through Jordan Plumbing.

Grease Pit / Pump Cleaning

It is noted in the minutes of the 2023 Annual General Meeting that, as costs associated with ongoing maintenance and cleaning of the grease pit are the responsibility of owners of lots 1 and 3 of Community Corporation No. 41144 Inc. (commercial premises), the arrangements for these services will be carried out by said corporation with costs recovered against the owners of lots 1 and 3 by way of a special levy.

Rubbish Collection

The rubbish collection is currently arranged privately through Veolia Environmental Services. It is noted that recently the management committee approved a green bin to be delivered to site and included in the service contract. Munro advised that Veolia need to be supplied with an additional gate remote for this service. This has been ordered through Ace Automation and will be given to Veolia when ready. Once the bin has been delivered, Munro is to contact all owners and property managers and advise them of this new service and the bin location.

Prior to the meeting, the management committee requested that Munro Property investigate the possibility of having the City of Norwood, Payneham, and St Peters take over the rubbish collection. A representative from the Council advised that to apply for a new non-standard waste service, a written application is to be made by the Corporation to the Council accompanied by a Waste Management Plan, prepared by a suitably qualified waste management consultant.

Munro obtained a quote for this service from MRA Consulting Group for $3,500 exc. GST and another from Elephants Foot Consulting for $4,495 exc. GST. These are to be tabled at the meeting. Members present agreed to proceed with MRA Consulting Group. Munro is to issue the work order and seek directions from the committee if required. Updates will be provided at future committee meetings.

Anchor Point Certification & Window Cleaning

It is noted that the Corporation has previously engaged the services of RISSafety Pty Ltd for the annual certification of the anchor points. Munro advises that they have engaged Adelaide Height Safety to carry out an assessment of the anchor points and provide their recommendations.

Mr Garner suggested that the Corporation investigate the option of drone window-cleaning, and has supplied contact information to Munro. Munro is investigating this and will table its findings at the next committee meeting.

Munro advised that the owner of lots 5 & 6 of Community Corporation No. 41144 Inc. (commercial) has requested that the Corporation carry out the cleaning of their windows as anchor points would not be required on second-storey windows. Munro advises that the Primary Corporation is only responsible for the cleaning of inaccessible windows. This matter is to be referred to the commercial Corporation's management committee for further instructions.

Light Repairs

Munro advised that the owner of lot 29 of Community Corporation No. 41146 Inc. (apartments) has requested that the Corporation repair the "La Verde" light that is flickering at night. Electric Environs had been engaged to attend to this, however the repairs are still pending as parts are required to be ordered in.

Munro further advised that repairs had been recently carried out to a flickering light in the carpark, a foyer light, and an external downlight.

Emergency Works

In the event of a property emergency, Munro is to be contacted in the first instance on 08 8132 2000. In the event of after-hours emergencies, the call will be directed to HPG Insurance & Maintenance Works. Please note that this service is above and beyond the standard service provided and will incur additional charges at an hourly rate.

If the works are not deemed an emergency or are determined to be the responsibility of the owner, costs will be passed to the owner for recovery.

GENERAL BUSINESS

Water Meter Reading & Billing

The previous management had been engaged to read the private water meters at the property and invoice the owners directly for usage. Under instructions from the management committee, Munro engaged the services of Strata Water Solutions, who will continue with this arrangement. The cost for this service will be budgeted for under the secondary corporations.

Residents Handbook / Moving Requests / Pet Approvals

Munro is to create a draft of these documents and forward them to Ms Eve Sullivan who had previously volunteered to assist with these. Once a final draft is complete, it will be tabled at the next committee meeting for formal adoption.

Member Register

The members register may be circulated as a confidential document to all owners upon request. Should you prefer not to have your details circulated, please advise the manager in writing.

To ensure you receive all corporation communications, please ensure you advise our office of a valid email address and advise of any contact changes that may occur.

Owners are reminded that correspondence and financial files are available for inspection upon request and with prior arrangement during regular business hours at the offices of Munro Property.

BUDGET & CONTRIBUTIONS

Review & Acceptance of Administration Fund

Resolved, in accordance with *The Community Titles Act 1996 Section 116,* that the proposed administration budget and consequently the annual contributions being $194,961.57 + GST be accepted.

Motion CARRIED.

Yes: 2	No: 0	Abstain: 0	Inv: 0

Administration funds are collected to pay recurrent expenditure of the Corporation such as the insurance premium.

Review & Acceptance of Sinking Fund

A community corporation requires a sinking fund under *The Community Titles Act 1996 Section 116 (3).* Non-recurrent expenditure must be made from the sinking fund and all other recurrent expenditure of the corporation must be made from the administrative fund.

Resolved, in accordance with *The Community Titles Act 1996 Section 116,* that the proposed sinking fund budget and consequently the annual contributions being $31,834.09 + GST be accepted.

Motion CARRIED.

Yes: 2	No: 0	Abstain: 0	Inv: 0

The sinking fund's purpose is not to be used to offset recurrent expenditure of the Corporation unless instructed so by the elected representatives and is additional to the above administration budget.

Contributions

Both contributions are to be divided by lot entitlement and paid in quarterly instalments.

Forward Budget

In accordance with *The Community Titles Act 1996 Section 113(1aa)* and *The Community Titles Regulations 2001 Regulation 18A*, corporations that are 20+ lots, with improvements (including buildings or other structures) on the common property insured for $100,000 or more, must present a 5-year forward budget at each Annual General Meeting. This budget must include any proposed expenditure (other than ongoing costs) for a 5-year period.

Munro recommends the Corporation utilise the services of qualified asset surveyors to provide this report should one be required.

Resolved that the management committee be authorised to arrange an updated sinking fund analysis report.

Motion CARRIED.

Yes: 2	No: 0	Abstain: 0	Inv: 0

UNPAID LEVIES POLICY

Approval of Debt Recovery Process for Arrears

Resolved as per *The Community Titles Act 1996 Section 114(8),* "a contribution, instalment or interest may be recovered as a debt", to adopt the revised policy of debt recovery, which is as follows:

- For levies unpaid 14 days after their due date, owner/s will receive a reminder letter and a text message (stage 1).
- For levies unpaid 60 days after their due date and greater than $50.00, the owner/s will receive a final notice outlining the cost associated with transferring the recovery to a lawyer and a text message (stage 2, cost $55.00).
- For levies unpaid 90 days after their due date and greater than $500.00, the owner/s will receive a notice outlining that the recovery of overdue levies will be transferred to a solicitors' office specialising in debt recovery (stage 3, cost $150.00).
- Any and all additional solicitors' costs will be payable by the owner.

Motion CARRIED.

Yes: 2	No: 0	Abstain: 0	Inv: 0

Approval of Recovery of Debt Collection Fees

Resolved unanimously that all fees incurred by the Corporation associated with the debt recovery process (including, but not limited to, solicitors' fees and court costs) will be payable by the owner, recovered by the action and applied to the lot owner's account.

All costs initially will need to be met by the Corporation but will be recovered by the action and applied to the lot owner's account.

Owners are advised that should the resolution fail, this may hinder that Corporation's ability to recoup debt recovery costs from owners who fall in arrears.

Motion CARRIED.

Yes: 2	No: 0	Abstain: 0	Inv: 0

Interest Charged on Overdue Accounts

As per *The Community Titles Act 1996 Section 14(b)* the Corporation may "fix (in accordance with the regulations) interest payable in respect of a contribution, or an instalment of a contribution, that is in arrears." The Corporation to confirm that the interest rate of 15% per annum remain in place and be applied to owners who fall in arrears with their payments.

Motion CARRIED.

Yes: 2	No: 0	Abstain: 0	Inv: 0

APPOINTMENT OF PUBLIC OFFICER

Under *The Income Tax Assessment Act 1936,* a person is required to be nominated to act as public officer for the Corporation. An owner can fill this position however this can present issues should ownership of the lot change at any time.

Resolved that Mr Joshua Baldwin of Munro act as Public Officer as defined under *The Income Tax Assessment Act 1936*.

Motion CARRIED.

Yes: 2	No: 0	Abstain: 0	Inv: 0

Munro advised that now they have been formally appointed as the public officer, they are now able to conduct further enquiries regarding the GST status of each Corporation.

ENGAGEMENT OF AUDITOR

Resolved as per *The Community Titles Act 1996 Section 138* that NRM Johnson be engaged as soon as possible to audit the annual statement of accounts.

NRM Johnson is a registered company auditor within the meaning of *The Corporations Act 2001* of the Commonwealth.

Motion CARRIED.

Yes: 2	No: 0	Abstain: 0	Inv: 0

NEXT MEETING DATE & MEETING CLOSURE

The date and time for the next Annual General Meeting is to be set under consultation with the management committee. There being no further business, the meeting was declared closed at 07:07 PM.

Munro Property Group Pty Ltd
136 The Parade NORWOOD SA 5067
08 8132 2000
bc@munroproperty.com.au
www.munroproperty.com.au

Community Corporation No. 41143 Inc.

La Verde (Primary), 56-60 King William Street, KENT TOWN SA 5067

Administrative Fund

	Approved budget
Revenue	
Levies Due (Special)--Admin	11,072.72
Levies Due--Admin	194,961.57
Total revenue	206,034.29
Less expenses	
Admin - Contractor Compliance Management	273.84
Admin--Accounting--Tax Return	240.90
Admin--Auditors--Audit Services	200.00
Admin--Bank Charges	25.00
Admin--Consultant Fees	12,818.18
Admin--Consultant--Asset & Utility Management Services	800.00
Admin--Consultant--BAS Prep. & Lodgement	400.00
Admin--Consultant--Comms/Data/Technology	3,272.72
Admin--Consultant--Meeting Fee	250.00
Admin--Consultant--Public Officer Fee	90.00
Insurance--Premiums	68,000.00
Maint Bldg--Caretaking	45,454.55
Maint Bldg--Cleaning--Materials	1,363.63
Maint Bldg--Cleaning--Windows/Glass	6,818.18
Maint Bldg--Consultant--General	681.82
Maint Bldg--Electrical--Lamps & Tubes	454.55
Maint Bldg--Electrical--Repairs	454.55
Maint Bldg--Fire Protection--Contract	5,000.00
Maint Bldg--Fire Protection--MFS Monitoring	1,090.91
Maint Bldg--Gate/Roller Door--Repair	681.82
Maint Bldg--Lift--Maintenance Contract	8,636.36
Maint Bldg--Lift--Registration Fees	90.91
Maint Bldg--Lift--Telephone	2,345.45
Maint Bldg--Miscellaneous	3,636.36
Maint Bldg--Plumbing	681.82
Maint Bldg--Repairs--Automatic Doors	454.55
Maint Bldg--Security--General	454.55
Maint Grounds - Garden maintenance	6,363.64
Utility--Electricity	15,000.00
Utility--Waste Management	20,000.00
Total expenses	206,034.29
Surplus/Deficit	0.00

Administrative Fund

	Approved budget
Opening balance	69,080.86
Closing balance	$69,080.86
Total units of entitlement	10000
Levy contribution per unit entitlement	$21.45
Budgeted standard levy revenue	194,961.57
Add GST	19,496.16
Amount to raise in levies including GST	$214,457.73

Sinking Fund

	Approved budget
Revenue	
Levies Due--Sinking	31,834.09
Total revenue	31,834.09
Less expenses	
Maint Bldg--Fire Protection	6,818.18
Maint Bldg--General Replacement	4,545.45
Total expenses	11,363.63
Surplus/Deficit	20,470.46
Opening balance	133,541.22
Closing balance	$154,011.68
Total units of entitlement	10000
Levy contribution per unit entitlement	$3.50
Budgeted standard levy revenue	31,834.09
Add GST	3,183.41
Amount to raise in levies including GST	$35,017.50

MUNRO™ Property Group Pty Ltd
ABN 41 007 878 079

t 08 8132 2000

Level 1, Suite 3, 136 The Parade
Norwood SA 5067
corporations@munroproperty.com.au
munroproperty.com.au

MINUTES OF THE INQUORATE EXTRAORDINARY GENERAL MEETING OF COMMUNITY CORPORATION NO. 41143 IN.

Meeting in accordance with the *Community Titles Act 1996*

La Verde (Primary)
56-60 King William Street, KENT TOWN, SA, 5067

In accordance with the *Community Titles Act 1996 Section 81(1)* the Officers of the Corporation called the Extraordinary General Meeting.

DATE: **3 April 2025**
TIME: **06:00 PM**
LOCATION: **Videoconference**

Attendance
Lot 1003 Community Corporation No. 41146 Inc. Represented by Grant Piggott

Others in attendance
Alice Rogers-Ross on behalf of Munro.

Apologies
Tony Zhang
June Sims
Paul Garner

Proxy Voting
Tony Zhang, proxy to Munro

Quorum
In accordance with *The Community Titles Act 1996 Section 83(4)*, a quorum is determined by dividing the number of persons entitled to attend and vote (financial members) at the meeting by two, disregarding any fraction and adding one. At the time of the meeting, a quorum was not achieved with only 1 lot was represented, therefore a new time and date were elected, and the meeting was adjourned.

MINUTES OF THE EXTRAORDINARY GENERAL MEETING OF COMMUNITY CORPORATION NO. 41143 INC.

Meeting In accordance with the *Community Titles Act 1996*

La Verde (Primary)
56-60 King William Street, KENT TOWN, SA, 5067

In accordance with the *Community Titles Act 1996 Section 81(1)* the Officers of the Corporation called the Extraordinary General Meeting.

DATE: **10 April 2025**
TIME: **06:00 PM**
LOCATION: **Microsoft Teams link: https://msteams.link/J0W5**

Attendance

Lot 1001	Community Corporation No. 41144 Inc.	Electronic vote
Lot 1002	Community Corporation No. 41145 Inc.	Proxy to by June Sims

Others in attendance
Eve Sullivan, Community Corporation No. 41146 Inc.
Alice Rogers-Ross on behalf of Munro.

Apologies
Paul Garner
Tony Zhang

Proxy Voting
In accordance with *The Community Titles Act 1993 Section 84(3),* proxies were tabled and subsequently the absentee votes on the proposed agenda have also been tabled as per the *Community Titles Act 1993 Section 84 (11).*

Tony Zhang, proxy to Munro

Quorum
In accordance with the *Community Titles Act 1996 Section 83(4)*, a quorum is determined by dividing the number of persons entitled to attend and vote (financial members) at the meeting by two, disregarding any fraction and adding one. At the time of the meeting, 2 of the 3 financial lots were represented, therefore the meeting opened at 6:05 PM.

Motions Resolved at the Reconvened Meeting (10 Apr 2025)

MEETING OPENING, APPOINTMENT OF MEETING CHAIRPERSON & MINUTE SECRETARY

Resolved that Alice Rogers-Ross of Munro would assist the Presiding Officer by conducting the meeting; and assist the Secretary in the recording of minutes as per the *Community Titles Act 1996 Section 83(3a).*

Motion CARRIED.

DECLARATION OF INTEREST

In accordance with the *Community Titles Act 1996 Section 85*, it is a legal requirement for members to make known to the meeting any direct or indirect financial interest in matters to be voted upon at a properly convened meeting. No declarations were made.

CONFIRMATION OF PREVIOUS MINUTES

Resolved, in accordance with the *Community Titles Act 1996 Section 81(5a),* that the minutes of the last Annual General Meeting held on the 30th of January 2025 be confirmed as a true record of the proceedings of that meeting.

Motion CARRIED.

ACCEPTANCE OF FINANCIAL STATEMENTS

Resolved, in accordance with the *Community Titles Act 1996 Section 81(5(d))* and the *Community Titles Regulations 2011 Section 16,* that the full financial statements year ending 31st of December 2024 having been circulated, tabled and discussed be accepted as a true and accurate record of the Corporation's financial standings.

Motion CARRIED.

Exclusive Use of Common Property - Lot 25 (41146)

Resolved that the owner of lot 25 of Community Corporation No. 41146, be granted exclusive access for a term of five (5) years to the common property marked 'Bike Store D' on the registered plan, for the purposes of ease of access to their allocated carpark.

Motion CARRIED.

COMMON PROPERTY MAINTENANCE

Waste Management

Munro advised that East Waste was contacted directly about the waste management plan (as requested at the AGM), but the representative advised that this needs to go through the council. Munro emailed their generic address (no response received thus far) and continues to follow up regularly with the council (no response received thus far).

Anchor Points

At the previous meeting, the committee queried the scope of work provided by Adelaide Height Safety (AHS), who have since provided the following clarification and alternative quote:

The original scope was only for inaccessible glass which is the most common type of installation on buildings like this one. We ensured that there are adequate anchor points above each bank of inaccessible glass. The gaps between rows of anchor points are just areas that have no inaccessible glass. Please find attached a revised quote. I've included a separate price for access to the entire facade. There are quite a few anchors, we use a calculator to ensure that the system layout is safe and compliant, below are the workings. The anchors are all approximately 3m back from the edge which means they can only be 3m apart to ensure we keep the swing factor to a compliant level. The rope access technicians connect to two anchor points. One is a primary, the other is a safety/backup. They share the load between both anchors. The idea is that if one anchor fails, they have a safety in place. If one was to fail, as the designer, we need to limit the swing factor to 1500mm which this system does.

Vertigo has also submitted a quote for the installation of 60 anchor points which will cover all 4 facades plus the 3 light wells for $13,696.76.

Members present agreed to defer making a decision on this item without more members present, given the level of expenditure. This is to be discussed at the next committee meeting.

Window Cleaning

On hold pending anchor points.

Carpark Linemarking

Members agreed to process payment for the pressure-washing, but could not at the time provide comment on the effectiveness of the clean. The committee is to advise Munro advise whether linemarking is required on upper-level carpark following the pressure clean. The work order then to be issued to Action Linemarking accordingly.

Preventative Roofing Works

Munro advised that this was completed by Tradeworks Building Group in February 2025.

GENERAL BUSINESS

EV Charging & Solar Battery Installation

Munro advises that thus far ESVE and Jetcharge have been unresponsive. Active Utilities have been approached, and Munro is still in the process of arranging a site inspection with them.

Yes Group have confirmed that additional panels will be beneficial to provide more power to the battery.

Upgrade of Bike Storage Area

Tradeworks Building Group submitted a quote for $7,920 and AWB Group submitted a quote for $11,841.50 which were both distributed to members prior to the meeting. Mr Matthews commented that the cost of the AWB Group was not reasonable, and their materials would be inferior. He also advised that the price from Tradeworks was more acceptable, but the scope would need to be adjusted to ensure maximum security.

After some discussion, it was agreed that Munro will arrange for Tradeworks to contact Mr Matthews to adjust the scope of work, and the quote will be tabled at the next committee meeting.

Fob Audit

The manager reported that, following discussion at the previous committee meeting, a tentative approach was made to the current security provider, MetroTech, regarding the possibility of engaging an alternative contractor to conduct a fob audit. MetroTech expressed a strong interest in retaining the contract and did not volunteer granting system access to another provider.

MetroTech advised that the simplest method for conducting a fob audit would be to schedule two days on-site, during which they would scan all active fobs and record the associated numbers.

The manager advised they are not comfortable pursuing further discussions with MetroTech about potentially changing providers, as there is a risk that the contractor could lock out the system. This could place liability on the manager, and as such, no further engagement on this matter will be initiated without clear direction from the Corporation.

After discussion, it was agreed to place the matter of changing providers on hold, and focus on carrying out the fob audit. Munro is to arrange this with MetroTech.

Lift Security

The manager reported that, in January 2025, an owner raised concerns regarding the ease of access to the upper floors, noting that individuals can enter the carpark and access the lifts without the need for fob authentication.

In response, the manager obtained a quote from Schindler Lifts for the installation of fob access readers in the two lifts. The quote provided is $6,883.73, and includes an allowance of six hours per lift. Schindler has requested confirmation from the security provider regarding the time required to run security cables to the lift controller, in case an adjustment to the quoted duration is necessary. It is noted that additional trailing flex (cabling within the shaft) is not expected to be required, resulting in a lower-than-anticipated cost.

The manager is to enquire whether the ground floor exit stairwells can be locked from the outside, as this will impact the effectiveness of implementing fob access to the lifts. If locking is possible, the manager will approach MetroTech to obtain pricing for liaising with Schindler Lifts regarding the integration of the fob system. The findings are to be discussed at the next committee meeting.

Insurance

The manager advised that CHU Underwriting, the current insurer, has provided a renewal invitation in the amount of $67,979.49, which is marginally lower—by $0.04—than the previous year's premium. The manager also advised:

- Elders Insurance were contacted but confirmed they only provide quotes through CHU.
- AAMI advised they do not offer suitable coverage for La Verde, as they exclude commercial premises and only insure residential schemes with fewer than 10 lots.
- Strata Community Insurance declined to quote last year due to cladding concerns. Their position remains unchanged despite recent follow-up.
- Hutch Insurance confirmed they do not insure buildings valued over $10 million; La Verde is currently insured for $36.9 million.

In exploring alternative options, CHU's "Flex" policy (a lower-cost policy with reduced coverage) was considered. Prior to the meeting, the committee was requested to advise which policy elements they would be willing to exclude in order to obtain a quote for the Flex policy; however, no response was received.

Members present agreed that it would not be in the best interest of owners to remove or limit coverage for what is likely to be a negligible saving. It was resolved to proceed with the renewal invitation as issued by CHU, and the manager was authorised to arrange payment.

MEETING CLOSURE

Members were thanks for their attendance. There being no further business, the meeting will be declared closed at 06:47 PM.

MUNRO™ Property Group Pty Ltd
ABN 41 007 878 079

t 08 8132 2000

Level 1, Suite 3, 136 The Parade
Norwood SA 5067
corporations@munroproperty.com.au
munroproperty.com.au

MINUTES OF THE ANNUAL GENERAL MEETING OF COMMUNITY CORPORATION NO. 41143 INC.

Meeting In accordance with the *Community Titles Act 1996*

La Verde (Primary)
56-60 King William Street, KENT TOWN, SA, 5067

In accordance with the *Community Titles Act 1996 Section 81 (1)* the Officers of the Corporation called the Annual General Meeting.

DATE: **14 August 2025**
TIME: **06:00 PM**
LOCATION: **Videoconference**

Attendance

Lot 1002	Community Corporation No. 41145 Inc.	Represented by Paul Garner (pre-voted)

Others in attendance
Alice Rogers-Ross on behalf of Munro.
Lisa Scheepers and Eve Sullivan, members of Community Corporation No. 41146 Inc.
Natasha Green, member of Community Corporation No. 41145 Inc.

Apologies
Grant Piggott

Proxy Voting
In accordance with *The Community Titles Act 1993 Section 84(3)*, proxies were tabled and subsequently the absentee votes on the proposed agenda have also been tabled as per the *Community Titles Act 1993 Section 84(11).*

Lot 1003	Community Corporation No. 41146 Inc.	Proxy Name: Munro Property Representative

Quorum
In accordance with *The Community Titles Act 1996 Section 83(4)*, a quorum is determined by dividing the number of persons entitled to attend and vote (financial members) at the meeting by two, disregarding any fraction and adding one. At the time of the meeting, 2 of the 3 financial members were represented, therefore the meeting opened at 06:00 PM.

MEETING OPENING, APPOINTMENT OF MEETING CHAIRPERSON & MINUTE SECRETARY

Resolved that Alice Rogers-Ross of Munro would assist the Presiding Officer by conducting the meeting; and assist the Secretary in the recording of minutes as per the *Community Titles Act 1996 Section 83(3a).*

Motion CARRIED.

Yes: 2	No: 0	Abstain: 0	Inv: 0

DECLARATION OF INTEREST

In accordance with the *Community Titles Act 1996 Section 85*, it is a legal requirement for members to make known to the meeting any direct or indirect financial interest in matters to be voted upon at a properly convened meeting. No declarations were made.

CONFIRMATION OF PREVIOUS MINUTES

Resolved, in accordance with the *Community Titles Act 1996 Section 81(5a),* that the minutes of the last Extraordinary General Meeting held on 10 April 2025 be confirmed as a true record of the proceedings of that meeting.

Motion CARRIED.

Yes: 2	No: 0	Abstain: 0	Inv: 0

ACCEPTANCE OF FINANCIAL STATEMENTS

Resolved, in accordance with the *Community Titles Act 1996 Section 81(5(d))* and the *Community Titles Regulations 2011 Section 16,* that the full financial statements year ending 30th of June 2025 having been circulated, tabled and discussed be accepted as a true and accurate record of the Corporation's financial standings.

Motion CARRIED.

Yes: 2	No: 0	Abstain: 0	Inv: 0

ELECTION OF OFFICE BEARERS

The Chairperson declared the positions vacant and called for nominations for Presiding Officer, Secretary and Treasurer. Resolved in accordance with the *Community Titles Act 1996 Section 76*, that the Corporation fill the positions as follows:

Presiding Officer - Paul Garner representing Community Corporation No. 41145 Inc.
Secretary - Denice Hansen representing Community Corporation No. 41144 Inc. (subject to their acceptance)
Treasurer - Grant Piggott representing Community Corporation No. 41146 Inc.

As per the *Community Titles Act 1996 Section 92*, If a vacancy arises in any of the positions, the position will need to be filled at a General Meeting, or, if the corporation has a management committee, the committee may, by ordinary resolution, appoint a lot owner to fill the vacancy.

Motion CARRIED.

Yes: 2	No: 0	Abstain: 0	Inv: 0

APPOINTMENT OF MANAGEMENT COMMITTEE

The *Community Titles Act 1996 Section 92(2)* states that: Subject to this Act and to any limitations imposed by the Corporation or by the bylaws of the community scheme, a management committee has full power to transact any business of the corporation.

Munro recommends the appointment of a management committee to ensure that the management consultant has the required directives from the representatives to carry out its business as it sees fit.

Resolved the appointment of a management committee comprising of the office bearers; and that the management committee be authorised to give consent for each occurrence of unplanned maintenance work that may occur throughout the year.

Motion CARRIED.

Yes: 2	No: 0	Abstain: 0	Inv: 0

The management committee has the authority to approve quotes, some minor additions, alterations, and approvals, however may (at its discretion) call a General Meeting to consult with all owners on any matter.

Owners are reminded the management committee does not have the power to authorise anything for which a special or unanimous resolution of the Corporation is required by the Act or the bylaws.

Munro advises that additional fees may apply if a representative is invited to attend committee meetings, assisting with chairing, and recording the minutes.

Should a management consultant not be required, it is the responsibility of the Secretary to ensure that detailed minutes are taken and provided to Munro to hold on file and carry out any requests in accordance with the contract of appointment.

APPOINTMENT OF SUBCOMMITTEE

Under the relevant legislation, only the Presiding Officers of each secondary corporation are authorised to provide instructions for the primary corporation in their capacity as a management committee. However, a subcommittee has been formed to promote transparency and engagement (although it is not legally empowered to make binding decisions on behalf of the Corporation).

The management committee has quarterly meetings, which all subcommittee members are invited to for their input. The current subcommittee is comprised of the following members:

June Sims (41145)
Natasha Green (41145)
Rose-Anne Zappia (41146)
Tony Zhang (41146)
Jodie Lutz & Manuel Quinquis (41146)
Frank Falco (41146)
Eve Sullivan (41146)
Lisa Scheepers (41146)
Tim Matthew (41146)

Resolved to re-appoint the subcommittee, consisting of the above members (subject to their acceptance).

Motion CARRIED.

Yes: 2	No: 0	Abstain: 0	Inv: 0

APPOINTMENT OF BODY CORPORATE MANAGER

Resolved that Munro is to be appointed as manager of the Corporation in accordance with the *Community Titles Act 1996 Section 76(9)* and to assist the appointed officer bearers via delegation for the following 12 months; and that the Presiding Officer be authorised to sign the management agreement.

Motion CARRIED.

Yes: 2	No: 0	Abstain: 0	Inv: 0

SERVICES COVERED BY ANNUAL MANAGEMENT FEE

See Management Contract of Appointment

The Manager has the functions and duties provided for under the Act including:

<u>Accounting</u>

- Establish and operate a bank account in the name of the Corporation or a trust account for the Corporation;
- Keep books of account covering all income and expenditure and assets and liabilities of the Corporation;
- Prepare annual financial statements of all income and expenditure and assets and liabilities of the Corporation (the annual accounts);
- Issue notices for fees set and special fees levied by the Corporation;

- Pay invoices on behalf of the Corporation (provided reasonable funds are held by the Corporation);
- Reconciliation of account.

Insurance

- Arrange insurance or renewal only with or through the authorising licensees listed in Clause 1.2 in accordance with the authority(ies) to provide insurance services listed in Clause 1.2, unless the Manager or the Manager's employer holds its own Australian Financial Services Licence covering the provision of the services;
- Arrange a valuation of the cost of reinstatement and replacement of the building/s when requested by the Corporation;
- Prepare and lodge routine insurance claims with insurers/brokers (max. 15 minutes);
- Provide any other insurance services in respect of insurance products offered through the authorising licensees as listed in Clause 1.2, or as otherwise authorised by the Australian Financial Services Licence held by the Manager, or the Manager's employer.

Documentation

- Maintain register of owners' names and addresses;
- Issue all Corporation search certificates and answer reasonable enquiries at the relevant cost of the applicant/enquirer;
- Deal with routine inwards and outward correspondence;
- Keep and supervise the use of the common seal;
- Keep the records of the Owners Corporation including minutes and ballots.

Annual General Meeting

- Convene, submit a budget and financial statement to and record minutes of the Annual General Meeting;
- Attendance at Annual General Meeting may be charged as Additional Services as set out in 2.2;
- Any meeting held outside the Manager's office may attract a fee for travel time as set out in 2.2.

Maintenance

- Arrange for minor (< $1,000 or 15 minutes) repairs and maintenance of Corporation's common property.

Guidance

- Provide guidance to the Corporation to enable the Corporation to carry out and perform its duties and functions, as set out in this clause.

General

- Generally implement the decisions and instructions of the Corporation with respect to its duties and functions as set out in this contract.

If additional services in Clauses 2.2 and 2.3, and the Special Conditions as stated in the management contract of appointment are provided, they will be charged to the Corporation where applicable. These charges may include government charges, registering as public officer, disbursements, data storage, audit charges and tax document preparation if necessary. These charges will be debited to the Corporation as actually expended.

INSURANCE

Insurance Details

As per the *Community Titles Act 1996 Section 103(1a) & (2(b,c))* the Corporation must insure the buildings and other improvements (if any) on the common property for the full cost of replacement with new materials. As per Section 104 of the *Community Titles Act 1996*, the Corporation must also hold fidelity guarantee cover and public liability cover, in addition to any other insurance required by the Act, its regulations or the Corporation bylaws.

The Corporation's insurance policy also covers the secondary corporations, being Community Corporations 41144, 41145 & 41146.

In accordance with the *Community Titles Act 1996 Section 81(5, d, iiib)* and the *Community Titles Regulations 2011 Regulation 16*, the current insurance details for the Corporation are included in the table below.

Policy Number	Underwriter	Current To	Risk Type	Coverage Amount
HU0038241	CHU Underwriting Agencies Pty Ltd	15 Apr 2026	Building	$36,915,000.00
			Loss of Rent/Temp Accom(15%)	$5,537,250.00
			Common Area Contents	$262,500.00
			Public Liability	$20,000,000.00
			Voluntary Workers	$200,000.00 / $2,000.00
			Fidelity Guarantee	$200,000.00
			Office Bearers Legal Liability	$250,000.00
			Machinery Breakdown (Over 5Kw)	$100,000.00
			Catastrophe	$11,074,500.00
			Government Audit Costs	$25,000.00
			Lot Owners Fixtures & Improvements	$250,000.00
			Flood	Included
			Appeal Expenses	$100,000.00
			Legal Defence Expenses	$50,000.00
			Extended cover - Rent/Temp Accommodation	$1,661,175.00

			Escalation in Cost of Temp Accommodation	$553,725.00
			Cost of Storage and Evacuation	$553,725.00
TOTAL PREMIUM: $67,979.49				

Munro is qualified to give general advice and information about insurance, not personal advice. If the Corporation requires specialist insurance advice, Munro can refer the Corporation to an insurance advisor. Munro advised the members that they are not qualified to advise on a replacement value and if guidance is required, the advice of a licensed valuer should be obtained. Munro recommends that the Corporation consider undertaking a valuation every 3-5 years to accommodate for market fluctuations, major catastrophe, and legislation changes.

Munro will not be held responsible for the decision of the Corporation relating to the sum insured and will be indemnified by the Corporation in the event a claim is not met in full due to the Corporation being under or uninsured.

Manager's Note: A member of Community Corporation No. 41146 Inc. requested that the Corporation obtains alternative quotes for the insurance renewal for the 2025-26 period. Munro advises the following:

- CHU Underwriting (current insurer) submitted their renewal terms, the premium marginally lower than the previous year.
- Elders Insurance were approached, but confirmed that they only provide quotes for strata corporations through CHU.
- AAMI advised that they do not offer suitable coverage for La Verde, as they exclude commercial premises and only insure residential schemes with fewer than 10 lots.
- Strata Community Insurance declined to quote last year due to cladding concerns. They were approached again this year and they advised their position has not changed.
- Hutch Insurance confirmed they do not insure buildings valued over $10 million.
- CHU Flex was considered by the committee (a lower-cost policy with reduced coverage), however it was agreed that it would not be in the best interest of the owners to remove or limit coverage for what was expected to be a negligible saving on the premium.
- The committee subsequently authorised Munro to proceed with renewing with CHU.

Valuation

In accordance with the *Community Titles Act 1996 Section 103(2)*, the Corporation must consider the value of the sum insured to include a total rebuild of the common property. It is stated in the *Community Titles Act 1996 Section 103(3)* that any shortfall resulting in the under insurance must be met by the Corporation members.

Munro advises members that they are not qualified to advise on a replacement value for insurance purposes owners are to be mindful that in case of a major event, council legislative requirements may have changed over the years thus incurring additional costs when rebuilding and if the members are unsure as to what the policy should be renewed for, they should obtain the advice of a valuer.

It is noted that the Corporation's last valuation was completed on 07 Mar 2024 by Acumentis (SA) Pty Ltd with the recommended replacement sum being $36,915,000.00.

Determination of Sums Insured

Resolved that the Corporation confirm, vary or extend the sums insured by a majority vote on the following options.

Motion CARRIED.

Yes: 2	No: 0	Abstain: 0	Inv: 0

Alternatives for Determination of Sums Insured

(Option A) To resolve that the Corporation increase the building sum insured by CPI upon renewal.

(Option B) To resolve that the members consider the current sums insured adequate to cover full replacement value and extend the policy to keep the same upon renewal as per the obligations under the *Community Titles Act 1996*.

(Option C) To resolve that Munro arranges an insurance valuation to be carried out for the Corporation, and that the sums insured amount be set as per the recommended replacement value.

'OPTION B' has been selected.

A: 0	B: 2	C: 0	Inv: 0

Authorised Representatives / Distributors

Munro Property is an Authorised Representative of Corporate Home Unit Underwriting Agencies Pty. Ltd and an Authorised Distributor of Strata Community Insurance Pty Ltd.

Placement of Insurance

Resolved that the Corporation extends the renewal date of the policy to coincide with the Annual General Meeting.

Should no clear instructions be received, in order to remain compliant with legislation and to ensure that the common property remains insured at all times, Munro is authorised to automatically renew the Corporation insurance policy before maturity each year at the limits of cover held by the Corporation.

Motion CARRIED.

Yes: 2	No: 0	Abstain: 0	Inv: 0

General Information

Members are advised that any successful claim will attract an excess and will likely affect the premium upon renewal.

Members are advised that claims made against the Corporation's insurance policy associated with lack of maintenance or naturally occurring deterioration (wear and tear) may be refused by the insurer. The Corporation should ensure that regular repairs and maintenance should be planned and carried out to prevent damage to the common property.

Claims also associated with non-rectification of an insured property defect, error, or omission that you were aware of or should reasonably have been made aware of may also be refused by the insurer.

Members are further advised that when making a claim against malicious damage, theft, arson etc. a Police Incident Report (PIR) number will be required by the insurer and the report should be made as soon as the insured is aware of the loss.

If members are unsure as to what is required when making a claim, they are to refer to the insurer's Product Disclosure Statement (PDS).

ALTERATIONS, ADDITIONS & APPROVALS

Owners are advised that Corporation approval may be required for certain things including (but not limited to) prescribed works, pets, and exclusive use of common property. Some approvals require the passing of a special or unanimous resolution and cannot be considered unless the exact wording of the proposal is included in the agenda.

"Prescribed work" in relation to a unit means:
(a) the erection, alteration, demolition or removal of a building;
(b) the alteration of the external appearance of a building.

If owners are unsure if Corporation approval is required, they are to contact Munro for further clarification.

Pet Approval – Lot 36 & 37 (41146)
Munro tabled a pet application for the new owner of lots 36 & 37, which was approved.

COMMON PROPERTY MAINTENANCE

Cleaning/Caretaking (Business Arising)

Munro advised that the Corporation currently engages CBR Property Maintenance for cleaning and general duties. The existing contract expires in February 2027, and $56,000 (excluding GST) has been allocated in the proposed budget for this service.

Entrance Gates (Business Arising)

Resolved that the Corporation continues with the annual service of both automatic carpark gates with Total Gates & Automation. $700 (excluding GST) has been allocated in the proposed budget for this service.

Motion CARRIED.

Yes: 2	No: 0	Abstain: 0	Inv: 0

Entrance Door (Business Arising)

Munro advised that the Corporation currently engages Dormakaba to service the entrance door four times a year. The existing contract expires in June 2026, and $400 (excluding GST) has been allocated in the proposed budget for this service.

Testing of Backflow Prevention Valve (Business Arising)

Munro advised that there is one backflow prevention device on the property, and it is fixed to the fire water supply. In order to test it, the fire services provider must attend with the plumber to deactivate the alarm.

This was carried out in December 2024, and will be scheduled again for December 2025.

Anchor Point Installation (Business Arising)

While investigating window cleaning options, it was identified that the existing anchor points at La Verde are fall-arrestor anchor points only—suitable for roof work, but not for façade access.

Munro obtained several quotes for the installation of appropriate anchor points (attached to the agenda):

- Adelaide Height Safety quoted $11,879 for the installation of 42 anchor points, providing access to all windows.
- Vertigo quoted $13,696 for the installation of 60 anchor points, providing access to all windows and light wells.

During the year, the committee requested further clarification regarding the number and placement of the proposed anchor points, specifically whether full façade access could be achieved rather than limited window access.

In response, Adelaide Height Safety submitted an alternative quote for the installation of 87 anchor points to provide comprehensive access to the entire façade for $24,248. They advised that a full façade system would offer significant long-term benefits, including access for both reactive repairs and planned maintenance, and may also reduce future costs by eliminating the need for additional equipment such as elevated work platforms or scaffolding.

Resolved that the Corporation proceeds with the installation of abseiling anchor points.

Motion CARRIED.

Yes: 2	No: 0	Abstain: 0	Inv: 0

Alternatives for Anchor Point Installation (Business Arising)

(Option A) To resolve to proceed with the quote from Adelaide Height Safety for $11,879 for the installation of 42 anchor points, providing access to all windows.

(Option B) To proceed with Vertigo for $13,696 for the installation of 60 anchor points, providing access to all windows and light wells.

(Option C) To resolve to proceed with the quote from Adelaide Height Safety for the installation of 87 anchor points to provide comprehensive access to the entire façade for $24,248.

'OPTION C' has been selected with the highest votes.

A: 0	B: 0	C: 2	Inv: 0

Manager's Note: While the quote from Adelaide Height Safety had been accepted, Munro is to obtain a secondary quote to ensure fair pricing. Munro is to request an onsite meeting with the contractor, and Mr Garner.

Munro was also requested to confirm that the abseiling points will be effective for painting the façade.

Window Cleaning (Business Arising)

The matter has been deferred to the 2026 Annual General Meeting.

Carpark Relining (Business Arising)

The committee recently approved a quote from Action Line Marking for $4,750 (including GST) to undertake the following works in the lower-level carpark: reline all bays, renumber carparks to align with property addresses, convert the existing motorbike bays back into a standard carpark reserved for cleaners/trades, and convert the current trades carpark into an accessible bay, as required by the City of Norwood, Payneham and St Peters.

Munro will provide all property managers, owners and residents with as much notice as possible as to when the work is booked.

Planter Box Replacement (Business Arising)

Mr Garner reported one of the planter boxes on the Little Rundle Street side had been damaged. Munro has supplied Mason Outdoors with the dimensions for a quote to replace.

Atrium Issues (Business Arising)

Munro advises that in April, one of the owners reported that the flashing on the fifth-level walkway was starting to come away. Munro arranged for Tradeworks to attend, and they carried out a temporary makesafe. They advised that the issue was caused by the Boston ivy growing up the atrium walls.

The manager met with Hedgehogs Gardens onsite in May. They advised that while support wires were installed for the ivy on the lower levels, none were placed on the upper levels. As a result, the ivy has used the building itself for support and has worked its way under the flashing.

This matter was referred to the committee, and the general consensus was to keep the ivy. Munro is in the process of coordinating with both Hedgehogs and Tradeworks to remove the ivy temporarily, install support wires, repair the flashing and reinstate the ivy.

Munro advised that they had received the quote from Tradeworks for their section of the work, for approximately $14,500. Members present agreed to defer the matter to the next committee meeting when more representation is present to make a decision.

The importance of maintaining the atrium's appearance and structure was acknowledged, but the committee wants to ensure value for money before proceeding.

Various Water Leaks (Business Arising)

Munro advises that several water leaks have been reported at the property, Apt 7, Apt 23 and two of the commercial lots. Tradeworks Building Group were initially engaged to investigate, and the developer has also inspected the apartments.

After receiving conflicting reports from Tradeworks and the developer, Munro requested that the Corporation's insurer appoint its own independent assessor. CHU appointment HPG Insurance and Maintenance Works who were in the process of arranging access to the apartments.

Updates will be provided to the committee when available.

Timber Treatment

Munro tabled a quote from Tradeworks to treat all timber surfaces in the atrium area for approximately $20,000. The figure seemed excessive, and members agreed to defer this to the management committee once the second quote is received.

Munro advised that the flooring of the atrium is the primary corporation responsibility, while the balustrades are the secondary corporation (41146) responsibility and requested that the quotes be itemised accordingly.

Emergency Works

In the event of a property emergency, Munro is to be contacted in the first instance on 08 8132 2000. In the event of after-hours emergencies, the call will be directed to HPG Insurance & Maintenance Works. Please note that this service is above and beyond the standard service provided and will incur additional charges at an hourly rate.

If the works are not deemed an emergency or are determined to be the responsibility of the owner, costs will be passed to the owner for recovery.

GENERAL BUSINESS

Waste Management (Business Arising)

In September 2024, a waste management plan was submitted along with an application to the City of Norwood, Payneham and St Peters, for the purpose of the council taking over waste management at the property. The Corporation currently engages a private company - Veolia Environmental Services - at a cost of $18,500 plus GST each year.

Despite multiple follow ups with both the council and their provider (East Waste) no updates had been received at the time of the agenda issuance. At the last committee meeting, Munro wrote to a member of the city council, requesting their assistance.

Munro advised that contact had since been made by the council, requesting clarification on some items in the waste management plan. These queries have been referred to MRA Consulting who created the plan. The committee will receive updates when available.

EV Charging (Business Arising)

Over the past year, the management committee has been investigating various options for electric vehicle (EV) charging. The discussion began as a proactive measure to ensure the building remains as future-proof as possible; however, the need for a formal EV charging policy soon became apparent.

Currently, two owners have installed EV chargers in their car parks at their own cost. These chargers are connected to their apartments' individual electricity meters. However, there is currently no load management system in place. This poses a risk: if more owners install similar chargers, the cumulative demand could overload the site's electrical infrastructure.

To address this, the committee investigated suitable solutions. The most viable option identified was the installation of an EV "backbone" infrastructure, including a load management system. Under this model, the Corporation would install the backbone, and individual owners would be responsible for connecting their chargers to it as needed.

A quote for the proposed system was obtained from YES Group (attached to the agenda) for approximately $65,000. Alternative quotes were requested but have not been received to date. The committee has resolved to consult with all owners to gauge interest in the project before proceeding further.

Owners are requested to note that if the majority do not wish to proceed with the installation of the EV infrastructure, it is unlikely that the Corporation will approve any further individual EV charger installations at the property.

Defeated, to proceed in principle with the installation of an Electric Vehicle backbone.

Motion DEFEATED.

Yes: 0	No: 2	Abstain: 0	Inv: 0

Solar Battery Installation (Business Arising)

The committee has been investigating the installation of additional solar batteries at the property to maximise the efficiency and benefit of the existing solar panel system. While quotes have been requested from various suppliers, none have been successfully obtained to date.

Munro advised that a request has recently been submitted to P4B Solar. The committee will receive updates when available.

Fob/Remote Audit (Business Arising)

Munro advised that while the current system has the capability to deactivate remotes and fobs, no register has been maintained to utilise these security features.

Munro arranged for the security contractor to attend site on Friday 8 August and Saturday 9 August between 8:00 AM and 12:00 PM to record active fobs and remotes. However, during the audit the contractor reported that several fobs scanned had no identifying digital number (and could not provide an explanation as to why), and apartment numbers were not consistently recorded. This outcome rendered the process ineffective.

Given the loss of confidence in the current provider, and noting that the system could be upgraded to incorporate enhanced features such as remote deactivation and swipe logs, it was agreed to place the second audit session on hold. Instead, Munro will obtain quotes for a new system and provide these to the Corporation for consideration and further instruction.

Lift Security (Business Arising)

In the interest of increasing building security, the committee have been investigating the installation of fob readers in the lifts. Munro advises that it would be ineffective to proceed without securing the ground floor fire exit stairwells. Munro queried this with Performance Fire Services, who advised the following:

I would have to review the egress provision for the floor as a whole against the Building Code if Australia. I can undertake assessment and prepare a brief memorandum for $880.00+GST. The assessment would only review Building Code of Australia requirements and would not be considerate of disability access / egress provisions. A specialist consultant is required if this is needed (my memorandum would complement their assessment).

Motion AMENDED
Resolved that the Corporation proceed with the assessment of the fire egress points for $880 plus GST, subject to the outcome of upgrading the security system.

Motion CARRIED.

Yes: 2	No: 0	Abstain: 0	Inv: 0

Installation of Bike Cage (Business Arising)

Munro advised that at the previous committee meeting, a quote was tabled from Tradeworks Building Group for $17,831 for the installation of a bike cage in the upper level carpark. Munro further advises that there has been increased interest registered by residents in having a more secure place to keep their bikes, following the spate of recent antisocial behaviour at the property.

The resident of Apt 6 suggested that the committee consider relocating the bike racks to the area east of the lobby between the SOHOs and the lobby. Members discussed this and agreed that the area would not be secure enough as the fencing can be easily cut through. After discussion, members agreed that the scope provided by Tradeworks was preferrable, and requested that Munro obtain a comparative quote. Once received, this is to be sent to the Presiding Officers for their instruction.

Issues with Apt 17 (Business Arising)

Munro advised the meeting that the owner of Apartment 17 had been issued several fines for their tenants' breach of bylaws. Munro further advised that the property manager had applied to SACAT for eviction in the coming weeks.

If the outcome is not favourable, the Corporation may consider applying to SACAT itself for eviction, and/or pursuing an intervention order.

Afterhours Callouts

Members discussed concerns about afterhours call-outs for residents who lock themselves out. The current afterhours service provider has access to the grand master key, but there are security and liability concerns, especially given recent incidents with residents and unauthorised access.

Members considered requiring residents to provide their full name and date of birth (or a password) in advance for identity verification during afterhours access requests. There was also discussion about alternative solutions, such as installing key safes in secure, communal areas like the cleaners' room, or requiring residents to use a specific locksmith. The group agreed to continue considering options and to raise the issue at the next committee meeting for broader input.

Member Register

To ensure you receive all communications from the corporation, please provide Munro Property with a valid email address and notify them promptly of any changes to your contact information.

The members register is a confidential document and distribution of this register must comply with the *Privacy Act 1988*. Requests for access to other members' details should be directed in writing to the secretary of the Corporation. If you prefer not to have your details circulated to other owners, please inform Munro Property in writing.

Owners are reminded that correspondence and financial records are available for inspection by appointment during regular business hours at the offices of Munro Property.

BUDGET & CONTRIBUTIONS

Review & Acceptance of Administration Fund

Resolved, in accordance with the *Community Titles Act 1996 Section 116,* that the proposed administration budget and consequently the annual contributions being $210,000.00 + GST be accepted.

Motion CARRIED.

Yes: 2	No: 0	Abstain: 0	Inv: 0

Administration funds are collected to pay recurrent expenditure of the Corporation such as the insurance premium.

Review & Acceptance of Sinking Fund

A community corporation requires a sinking fund under the *Community Titles Act 1996 Section 116 (3).* Non-recurrent expenditure must be made from the sinking fund and all other recurrent expenditure of the corporation must be made from the administrative fund.

Resolved, in accordance with the *Community Titles Act 1996 Section 116,* that the proposed sinking fund budget and consequently the annual contributions being $35,096.99 + GST be accepted.

The sinking fund's purpose is not to offset recurrent expenditure of the Corporation (unless instructed so by the elected representatives) and is additional to the above administration budget.

Motion CARRIED.

Yes: 2	No: 0	Abstain: 0	Inv: 0

Contributions

Both contributions are to be divided by lot entitlement and paid in quarterly instalments.

Forward Budget

In accordance with the *Community Titles Act 1996 Section 113(1aa)* and the *Community Titles Regulations 2001 Regulation 18A*, corporations that are 7-20 lots, with improvements (including buildings or other structures) on the common property insured for $100,000 or more, a 3-year forward budget must be presented at each Annual General Meeting. This budget must include any proposed expenditure (other than ongoing costs) for a 3-year period.

Corporations that are 20+ lots, with improvements (including buildings or other structures) on the common property insured for $100,000 or more, must present a 5-year forward budget at each Annual General Meeting. This budget must include any proposed expenditure (other than ongoing costs) for a 5-year period.

Corporations with less than 7 lots or a common property insurance value of less than $100,000 are exempt from providing a forward budget.
Munro recommends the Corporation utilise the services of qualified asset surveyors to provide this report should one be required.

Alternatives for Forward Budget

(Option A) To resolve to obtain an updated sinking fund analysis report for the purposes of long-term budgeting. This is to be sent to the management committee for further instructions once received.

(Option B) To resolve that a sinking fund analysis report is not required at this time as a sinking fund analysis has been carried out in the last 3 years.

Votes are equal therefore no alternative has been selected.

A: 1	B: 1	Inv: 0

UNPAID LEVIES POLICY

Approval of Debt Recovery Process for Arrears

Resolved as per the *Community Titles Act 1996 Section 114(8),* which provides that "a contribution, instalment or interest may be recovered as a debt", the Corporation hereby adopts (or reaffirms, where previously adopted) the following debt recovery policy:

- For levies unpaid 14 days after their due date, owner/s will receive a reminder letter and a text message (stage 1).
- For levies unpaid 60 days after their due date and greater than $50.00, the owner/s will receive a final notice outlining the cost associated with transferring the recovery to a lawyer and a text message (stage 2, cost $55.00).
- For levies unpaid 90 days after their due date and greater than $500.00, the owner/s will receive a notice outlining that the recovery of overdue levies will be transferred to a solicitors' office specialising in debt recovery (stage 3, cost $150.00).

Motion CARRIED.

Yes: 2	No: 0	Abstain: 0	Inv: 0

Approval of Recovery of Debt Collection Fees

Munro advised that a member of the secondary corporation (41146) had voted against the recovery. As a result, the vote for the entire corporation must be recorded as dissenting. It was generally agreed that, although both corporations are managed by the same company, this is unlikely to generate any complications.

Defeated unanimously that all fees incurred by the Corporation associated with the debt recovery process (including, but not limited to, solicitors' fees and court costs) will be payable by the owner, recovered by the action and applied to the lot owner's account.

Motion DEFEATED.

Yes: 1	No: 1	Abstain: 0	Inv: 0

Interest Charged on Overdue Accounts

As per the *Community Titles Act 1996 Section 14(b),* the Corporation may "fix (in accordance with the regulations) interest payable in respect of a contribution, or an instalment of a contribution, that is in arrears."

Resolved that the Corporation resolve to adopt, or (where previously adopted) reaffirm, an interest rate of 15% per annum to be applied to contributions in arrears, in accordance with the Act.

Motion CARRIED.

Yes: 2	No: 0	Abstain: 0	Inv: 0

APPOINTMENT OF PUBLIC OFFICER

Under the *Income Tax Assessment Act 1936,* a person is required to be nominated to act as public officer for the Corporation. An owner can fill this position however this can present issues should ownership of the lot change at any time.

Resolved that Mr Joshua Baldwin of Munro act as Public Officer as defined under the *Income Tax Assessment Act 1936*.

Motion CARRIED.

Yes: 2	No: 0	Abstain: 0	Inv: 0

ENGAGEMENT OF AUDITOR

Resolved as per the *Community Titles Act 1996 Section 138* that NRM Johnson be engaged to audit the annual statement of accounts.

NRM Johnson is a registered company auditor within the meaning of the *Corporations Act 2001* of the Commonwealth.

Motion CARRIED.

Yes: 2	No: 0	Abstain: 0	Inv: 0

NEXT MEETING DATE & MEETING CLOSURE

The date and time for the next Annual General Meeting and the quarterly committee meetings are to be set under consultation with the management committee. There being no further business, the meeting was declared closed at 07:26 PM.

Munro Property Group Pty Ltd
136 The Parade NORWOOD SA 5067
08 8132 2000
bc@munroproperty.com.au
www.munroproperty.com.au

Approved Budget
to apply from 01/07/2025

Community Corporation No. 41143 Inc.

La Verde (Primary), 56-60 King William Street, KENT TOWN SA 5067

Administrative Fund

	Approved budget
Revenue	
Levies Due--Admin	210,000.00
Recovery--Lift	10,590.91
Transfer from Sinking Fund	25,000.00
Total revenue	245,590.91
Less expenses	
Admin - Contractor Compliance Management	273.84
Admin--Accounting--Tax Return	240.90
Admin--Auditors--Audit Services	200.00
Admin--Bank Charges--Account Fees	20.00
Admin--Consultant Fees	12,818.18
Admin--Consultant--BAS Prep. & Lodgement	600.00
Admin--Consultant--Comms/Data/Technology	3,272.72
Admin--Consultant--Meeting Fee	250.00
Admin--Consultant--Public Officer Fee	90.00
Admin--Meeting Room Expenses	220.00
Admin--Telephone Charges--Fire Protection	1,460.00
Contingency	10,000.00
Insurance--Premiums	65,000.00
Maint Bldg - Automatic Doors	400.00
Maint Bldg--Building Repairs--General	1,000.00
Maint Bldg--Caretaking	56,076.00
Maint Bldg--Consultant--General	3,100.00
Maint Bldg--Electrical--Repairs	454.55
Maint Bldg--Fire Protection	5,000.00
Maint Bldg--Fire Protection--Contract	6,000.00
Maint Bldg--Fire Protection--MFS Monitoring	1,120.00
Maint Bldg--Gate/Roller Door--Repair	500.00
Maint Bldg--Gates	700.00
Maint Bldg--Lift--Maintenance Contract	10,500.00
Maint Bldg--Lift--Registration Fees	90.91
Maint Bldg--Plumbing	500.00
Maint Grounds - Garden maintenance	10,000.00
Utility--Electricity	12,400.00
Utility--Waste Management	18,500.00
Total expenses	220,787.10
Surplus/Deficit	24,803.81

Administrative Fund

	Approved budget
Opening balance	(31,878.91)
Closing balance	-$7,075.10
Total units of entitlement	10000
Levy contribution per unit entitlement	$23.10
Budgeted standard levy revenue	210,000.00
Add GST	21,000.00
Amount to raise in levies including GST	$231,000.00

Sinking Fund

	Approved budget
Revenue	
Levies Due--Sinking	35,096.99
Total revenue	35,096.99
Less expenses	
Admin--Transfer to Admin Fund	25,000.00
Maint Bldg--Fire Protection	8,934.00
Maint Bldg--General Replacement	7,713.00
Maint Bldg--Painting	2,442.00
Maint Bldg--Plant & Equipment	1,157.00
Total expenses	45,246.00
Surplus/Deficit	(10,149.01)
Opening balance	168,106.85
Closing balance	$157,957.84
Total units of entitlement	10000
Levy contribution per unit entitlement	$3.86
Budgeted standard levy revenue	35,096.99
Add GST	3,509.70
Amount to raise in levies including GST	$38,606.69

MUNRO™ Property Group Pty Ltd
ABN 41 007 878 079

t 08 8132 2000

Level 1, Suite 3, 136 The Parade
Norwood SA 5067
corporations@munroproperty.com.au
munroproperty.com.au

MINUTES OF THE ANNUAL GENERAL MEETING OF COMMUNITY CORPORATION NO. 41143 INC.

Meeting In accordance with the *Community Titles Act 1996*

La Verde (Primary)
56-60 King William Street, KENT TOWN, SA, 5067

In accordance with the *Community Titles Act 1996 Section 81(1)* the Officers of the Corporation called the Annual General Meeting.

DATE: **30 January 2025**
TIME: **06:00 PM**
LOCATION: **Videoconference**

Attendance

Lot 1001	Community Corporation No. 41144 Inc.	Represented by Denice Hansen
Lot 1002	Community Corporation No. 41145 Inc.	Represented by Paul Garner
Lot 1003	Community Corporation No. 41146 Inc.	Represented by Grant Piggott

Others in attendance
Alice Rogers-Ross on behalf of Munro.
Natasha Green, guest of Paul Garner
Rose-Anne Zappia, guest of Grant Piggott
Frank Falco, guest of Grant Piggott
Tim Matthew, guest of Grant Piggott

Apologies
June Sims
Tony Zhang

Proxy Voting
In accordance with *The Community Titles Act 1993 Section 84(3),* proxies were tabled and subsequently the absentee votes on the proposed agenda have also been tabled as per the *Community Titles Act 1993 Section 84 (11).*

Tony Zhang, proxy to Munro representative.

Quorum
In accordance with the *Community Titles Act 1996 Section 83(4)*, a quorum is determined by dividing the number of persons entitled to attend and vote (financial members) at the meeting by two, disregarding any fraction and adding one. At the time of the meeting, 3 of the 3 lots were represented, therefore the meeting opened at 06:05 PM.

MEETING OPENING, APPOINTMENT OF MEETING CHAIRPERSON & MINUTE SECRETARY

Resolved that Alice Rogers-Ross of Munro would assist the Presiding Officer by conducting the meeting; and assist the Secretary in the recording of minutes as per *The Community Titles Act 1996 Section 83(3a).*

Motion CARRIED.

Yes: 3	No: 0	Abstain: 0	Inv: 0

DECLARATION OF INTEREST

In accordance with the *Community Titles Act 1996 Section 85*, it is a legal requirement for members to make known to the meeting any direct or indirect financial interest in matters to be voted upon at a properly convened meeting.

CONFIRMATION OF PREVIOUS MINUTES

Resolved, in accordance with the *Community Titles Act 1996 Section 81(5a),* that the minutes of the last Annual General Meeting held on the 8th of May 2024 be confirmed as a true record of the proceedings of that meeting.

Motion CARRIED.

Yes: 2	No: 0	Abstain: 1	Inv: 0

ACCEPTANCE OF FINANCIAL STATEMENTS

Defeated, in accordance with the *Community Titles Act 1996 Section 81(5(d))* and the *Community Titles Regulations 2011 Section 16,* that the full financial statements year ending 30th of November 2024 having been circulated, tabled and discussed be accepted as a true and accurate record of the Corporation's financial standings.

Motion LOST.

Yes: 0	No: 0	Abstain: 3	Inv: 0

Members agreed to defer this matter to the next committee meeting.

CHANGE OF END OF FINANCIAL YEAR (BUSINESS ARISING)

At the last committee meeting, the members suggested that the Corporation move its end of financial year (30 November) to coincide with the actual end of financial year.

Munro advised that the secondary corporations agreed to move their end of financial years at their AGMs.

Resolved that the Corporation change its end of financial year to 30 June.

Motion CARRIED.

Yes: 2	No: 0	Abstain: 1	Inv: 0

Munro advised that the Annual General Meeting is required to be held no later than 60 days after the end of financial year, which means the AGMs will be moved from January to August.

ELECTION OF OFFICE BEARERS

The Chairperson declared the positions vacant and called for nominations for Presiding Officer, Secretary and Treasurer. Resolved in accordance with the *Community Titles Act 1996 Section 76*, that the Corporation fill the positions as follows:

Presiding Officer - Paul Garner, representing Community Corporation No. 41145 Inc.
Secretary – Denice Hansen, representing Community Corporation No. 41144 Inc.
Treasurer – Grant Piggott, representing Community Corporation No. 41146 Inc.

As per the *Community Titles Act 1996 Section 92*, If a vacancy arises in any of the positions, the position will need to be filled at a General Meeting, or, if the corporation has a management committee, the committee may, by ordinary resolution, appoint a lot owner to fill the vacancy.

Motion CARRIED.

Yes: 3	No: 0	Abstain: 0	Inv: 0

APPOINTMENT OF MANAGEMENT COMMITTEE

The *Community Titles Act 1996 Section 92(2)* states that: Subject to this Act and to any limitations imposed by the Corporation or by the bylaws of the community scheme, a management committee has full power to transact any business of the corporation.

Munro recommends the appointment of a management committee to ensure that the management consultant has the required directives from the representatives to carry out its business as it sees fit.

Resolved the appointment of a management committee as per successful nomination at meeting; and that the management committee be authorised to give consent for each occurrence of unplanned maintenance work that may occur throughout the year.

Motion CARRIED.

Yes: 3	No: 0	Abstain: 0	Inv: 0

The management committee has the authority to approve quotes, some minor additions, alterations, and approvals, however may (at its discretion) call a General Meeting to consult with all owners on any matter.

Owners are reminded that the management committee does not have the power to authorise anything for which a special or unanimous resolution of the Corporation is required by the Act or the bylaws.

Munro advises that additional fees may apply if a representative is invited to attend committee meetings, assisting with chairing, and recording the minutes.

Should a management consultant not be required, it is the responsibility of the Secretary to ensure that detailed minutes are taken and provided to Munro to hold on file and carry out any requests in accordance with the contract of appointment.

APPOINTMENT OF SUBCOMMITTEE

It is noted that in the past, the management committee has had several delegates from the secondary corporations appointed, however, legislation mandates that only one representative from each lot may be appointed to the committee.

It was therefore resolved at that a subcommittee would be appointed, consisting of the following members:

Denice Hansen (41144)
Paul Garner (41145)
June Sims (41145)
Natasha Green (41145)
Grant Piggott (41146)
Rose-Anne Zappia (41146)
Tony Zhang (41146)
Jodie Lutz & Manuel Quinquis (41146)
Frank Falco (41146)
Eve Sullivan (41145)
Lisa Scheepers (41146)
Tim Matthew (41146)

Motion CARRIED.

Yes: 3	No: 0	Abstain: 0	Inv: 0

APPOINTMENT OF BODY CORPORATE MANAGER

Resolved that Munro is to be appointed as manager of the Corporation in accordance with the *Community Titles Act 1996 Section 76(9)* and to assist the appointed officer bearers via delegation for the following 12 months; and that the Presiding Officer be authorised to sign the management agreement.

Motion CARRIED.

Yes: 3	No: 0	Abstain: 0	Inv: 0

SERVICES COVERED BY ANNUAL MANAGEMENT FEE

See Management Contract of Appointment

The Manager has the functions and duties provided for under the Act including:

<u>Accounting</u>

- Establish and operate a bank account in the name of the Corporation or a trust account for the Corporation;
- Keep books of account covering all income and expenditure and assets and liabilities of the Corporation;
- Prepare annual financial statements of all income and expenditure and assets and liabilities of the Corporation (the annual accounts);
- Issue notices for fees set and special fees levied by the Corporation;
- Pay invoices on behalf of the Corporation (provided reasonable funds are held by the Corporation);
- Reconciliation of account.

Insurance

- Arrange insurance or renewal only with or through the authorising licensees listed in Clause 1.2 in accordance with the authority(ies) to provide insurance services listed in Clause 1.2, unless the Manager or the Manager's employer holds its own Australian Financial Services Licence covering the provision of the services;
- Arrange a valuation of the cost of reinstatement and replacement of the building/s when requested by the Corporation;
- Prepare and lodge routine insurance claims with insurers/brokers (max. 15 minutes);
- Provide any other insurance services in respect of insurance products offered through the authorising licensees as listed in Clause 1.2, or as otherwise authorised by the Australian Financial Services Licence held by the Manager, or the Manager's employer.

Documentation

- Maintain register of owners' names and addresses;
- Issue all Corporation search certificates and answer reasonable enquiries at the relevant cost of the applicant/enquirer;
- Deal with routine inwards and outward correspondence;
- Keep and supervise the use of the common seal;
- Keep the records of the Owners Corporation including minutes and ballots.

Annual General Meeting

- Convene, submit a budget and financial statement to and record minutes of the Annual General Meeting;
- Attendance at Annual General Meeting may be charged as Additional Services as set out in 2.2;
- Any meeting held outside the Manager's office may attract a fee for travel time as set out in 2.2.

Maintenance

- Arrange for minor (< $1,000 or 15 minutes) repairs and maintenance of Corporation's common property.

Guidance

- Provide guidance to the Corporation to enable the Corporation to carry out and perform its duties and functions, as set out in this clause.

General

- Generally implement the decisions and instructions of the Corporation with respect to its duties and functions as set out in this contract.

If additional services in Clauses 2.2 and 2.3, and the Special Conditions as stated in the management contract of appointment are provided, they will be charged to the Corporation where applicable. These charges may include government charges, registering as public officer, disbursements, data storage, audit charges and tax document preparation if necessary. These charges will be debited to the Corporation as actually expended.

INSURANCE

Insurance Details

As per the *Community Titles Act 1996 Section 103(1a) & (2(b,c))* the Corporation must insure the buildings and other improvements (if any) on the common property for the full cost of replacement with new materials. As per Section 104 of the *Community Titles Act 1996*, the Corporation must also hold fidelity guarantee cover and public liability cover, in addition to any other insurance required by the Act, its regulations or the Corporation bylaws.

In accordance with the *Community Titles Act 1996 Section 81(5, d, iiib)* and the *Community Titles Regulations 2011 Regulation 16*, the current insurance details for the Corporation are included in the table below.

Policy Number	Underwriter	Current To	Risk Type	Coverage Amount
HU0038241	CHU Underwriting Agencies Pty Ltd	15 Apr 2025	Building	$36,915,000.00
			Loss of Rent/Temp Accom(15%)	$5,537,250.00
			Common Area Contents	$262,500.00
			Public Liability	$20,000,000.00
			Voluntary Workers	$200,000.00 / $2,000.00
			Fidelity Guarantee	$200,000.00
			Office Bearers Legal Liability	$250,000.00
			Machinery Breakdown (Over 5Kw)	$100,000.00
			Catastrophe	$11,074,500.00
			Government Audit Costs	$25,000.00
			Lot Owners Fixtures & Improvements	$250,000.00
			Flood	Included
			Appeal Expenses	$100,000.00
			Legal Defence Expenses	$50,000.00
			Extended cover - Rent/Temp Accommodation	$1,661,175.00
			Escalation in Cost of Temp Accommodation	$553,725.00

			Cost of Storage and Evacuation	$553,725.00
TOTAL PREMIUM: $67,979.53				

Munro is qualified to give general advice and information about insurance, not personal advice. If the Corporation requires specialist insurance advice, Munro can refer the Corporation to an insurance advisor. Munro advised the members that they are not qualified to advise on a replacement value and if guidance is required, the advice of a licensed valuer should be obtained. Munro recommends that the Corporation consider undertaking a valuation every 3-5 years to accommodate for market fluctuations, major catastrophe, and legislation changes.

Munro will not be held responsible for the decision of the Corporation relating to the sum insured and will be indemnified by the Corporation in the event a claim is not met in full due to the Corporation being under or uninsured.

Valuation

In accordance with the *Community Titles Act 1996 Section 103(2)*, the Corporation must consider the value of the sum insured to include a total rebuild of the common property. It is stated in the *Community Titles Act 1996 Section 103(3)* that any shortfall resulting in the under insurance must be met by the Corporation members.

Munro advises members that they are not qualified to advise on a replacement value for insurance purposes owners are to be mindful that in case of a major event, council legislative requirements may have changed over the years thus incurring additional costs when rebuilding and if the members are unsure as to what the policy should be renewed for, they should obtain the advice of a valuer.

It is noted that the Corporation's last valuation was completed on 07 Mar 2024 by Acumentis SA Pty Ltd with the recommended replacement sum being $36,915,000.00.

Determination of Sums Insured

Resolved that the Corporation confirm, vary or extend the sums insured by a majority vote on the following options.

Motion CARRIED.

Yes: 3 No: 0 Abstain: 0 Inv: 0

Alternatives for Determination of Sums Insured

(Option A) To resolve that the Corporation increase the building sum insured by CPI or 5% (whichever is greater) upon renewal.

(Option B) To resolve that the members consider the current sums insured adequate to cover full replacement value and extend the policy to keep the same upon renewal as per the obligations under *The Community Titles Act 1996*.

(Option C) To resolve that Munro arranges an insurance valuation to be carried out for the Corporation, and that the sums insured amount be set as per the recommended replacement value.

'OPTION B' has been selected with the highest votes.

A: 1	B: 2	C: 0	Inv: 0

Authorised Representatives / Distributors

Munro Property is an Authorised Representative of Corporate Home Unit Underwriting Agencies Pty. Ltd and an Authorised Distributor of Strata Community Insurance Pty Ltd.

Placement of Insurance

Resolved that the management committee be authorised to provide instructions to Munro regarding the renewal / placement of insurance.

Should no clear instructions be received, in order to remain compliant with legislation and to ensure that the common property remains insured at all times, Munro is authorised to automatically renew the Corporation insurance policy before maturity each year at the limits of cover held by the Corporation.

Motion CARRIED.

Yes: 3	No: 0	Abstain: 0	Inv: 0

General Information

Landlords / Contents Insurance

Munro advises all owners that the Corporation's insurance does not cover the landlord or contents insurance. Each owner is responsible for ensuring that they have cover in place which suits their individual needs. The Corporation's policy also does not include public liability cover for individual units.

Insurance Claims

Owners are advised that any successful claim will attract an excess and will likely affect the premium upon renewal. If a claim is made because of lack of maintenance by the Corporation, the Corporation will be responsible for paying the excess. The owner will generally be responsible for the payment of the excess in all other instances.

Owners are advised that claims made against the Corporation's insurance policy associated with lack of maintenance or naturally occurring deterioration (wear and tear) may be refused by the insurer. The Corporation should ensure that regular repairs and maintenance should be planned and carried out to prevent damage to the common property.

Claims also associated with non-rectification of an insured property defect, error, or omission that you were aware of or should reasonably have been made aware of may also be refused by the insurer.

Owners are further advised that when making a claim against malicious damage, theft, arson etc. a Police Incident Report (PIR) number will be required by the insurer and the report should be made as soon as the insured is aware of the loss.

If owners are unsure as to what is required when making a claim, they are to refer to the insurer's Product Disclosure Statement (PDS).

ALTERATIONS, ADDITIONS & APPROVALS

No applications were submitted for consideration.

Owners are advised that Corporation approval may be required for certain things including (but not limited to) prescribed works, pets, and exclusive use of common property. Some approvals require the passing of a special or unanimous resolution and cannot be considered unless the exact wording of the proposal is included in the agenda.

"Prescribed work" in relation to a unit means:
(a) the erection, alteration, demolition or removal of a building;
(b) the alteration of the external appearance of a building.

If owners are unsure if Corporation approval is required, they are to contact Munro for further clarification.

COMMON PROPERTY MAINTENANCE

Cleaning / Caretaking (Business Arising)

Motion AMENDED.
Resolved that the Corporation continue with the services of CBR Property Maintenance for the following 24 months.

Motion CARRIED.

Yes: 3	No: 0	Abstain: 0	Inv: 0

Entrance Gates (Business Arising)

Resolved that the Corporation undertake preventative maintenance to the automatic gates annually.

Motion CARRIED.

Yes: 3	No: 0	Abstain: 0	Inv: 0

Entrance Doors (Business Arising)

Resolved that the Corporation continues with the services of Dormakaba to service the entrance door 3 times a year at an annual cost of $330. The expiry date for the contract is 1 June 2026.

Motion CARRIED.

Yes: 3	No: 0	Abstain: 0	Inv: 0

Grease Pit / Pump Cleaning (Business Arising)

Costs associated with ongoing maintenance and cleaning of the grease pit are the responsibility of owners of lots 1 and 3 of Community Corporation No. 41144 Inc. (commercial premises), the arrangements for these services will be carried out by said corporation with costs recovered against the owners of lots 1 and 3 by way of a special levy.

Common Property Maintenance Summary

Over the course of the year, the management committee have been addressing the following ongoing items:

Waste Management
This matter remains with the council. Ms Zappia suggested Munro contact Cleanaway direct to try to expedite the process.

Testing of Backflow Prevention Valves
Munro advised that there is one backflow prevention device on the property, and it is fixed to the fire water supply. In order to test it, the fire services provider must attend with the plumber to deactivate the alarm.

This was carried out in December 2024, and will be scheduled again for December 2025.

Anchor Point Certification / Installation of Rope-Access Anchor Points
Munro advised that clarification has been sort from Adelaide Height Safety about their quote, with particular relation to the amount of points proposed and the apparent gaps in coverage. Sky High Access has also been approached for a comparative quote.

Window Cleaning
On hold pending the outcome of the rope-access anchor point installation.

Carpark Linemarking
The cleaner is undertaking the pressure-clean of the upper level carpark in late February. Once this is complete, the committee will access whether linemarking is required on that level. A work order will be issued to Action Linemarking accordingly.

Preventative Roof Maintenance
The committee determined that is was highly unlikely that the roof maintenance would be covered under the building warranty due to the expiry date of the contract and the nature of the work (wear and tear not covered under warranty). A work order was then issued to Tradeworks Building Group.

Hard Rubbish Collection

Munro was requested to arrange a hard rubbish collection and advise the owners/property managers of the booking date. Hard rubbish is to be collected from the eastern entrance.

Emergency Works

In the event of a property emergency, Munro is to be contacted in the first instance on 08 8132 2000. In the event of after-hours emergencies, the call will be directed to HPG Insurance & Maintenance Works. Please note that this service is above and beyond the standard service provided and will incur additional charges at an hourly rate.

If the works are not deemed an emergency or are determined to be the responsibility of the owner, costs will be passed to the owner for recovery.

GENERAL BUSINESS

General Business Summary

Over the course of the year, the management committee have been addressing the following ongoing items:

EV Charging
Munro advised that ESVE and Jetcharge have been approached for a proposal. Updates to be provided at the next committee meeting,

Solar Battery Installation
Updates to be provided at the next committee meeting,

Intercom & Fob Entry System
Munro advised that a dialogue has been opened with MetroTech regarding the fob audit. Updates will be provided to the committee when available.

Upgrade of Bike Storage Area

Mr Matthew suggested that the Corporation investigate upgrading the security of the bike storage area in the upper-level carpark. Munro is to obtain some proposals from appropriate contractors, this will be discussed at the next committee meeting.

Member Register

To ensure you receive all communications from the corporation, please provide Munro Property with a valid email address and notify them promptly of any changes to your contact information.

The members register is a confidential document and distribution of this register must comply with the *Privacy Act 1988*. Requests for access to other members' details should be directed in writing to the secretary of the Corporation. If you prefer not to have your details circulated to other owners, please inform Munro Property in writing.

Owners are reminded that correspondence and financial records are available for inspection by appointment during regular business hours at the offices of Munro Property.

BUDGET & CONTRIBUTIONS

Review & Acceptance of Administration Fund

Administration funds are collected to pay recurrent expenditure of the Corporation such as the insurance premium.

Resolved, in accordance with the *Community Titles Act 1996 Section 116,* that the proposed administration budget and consequently the annual contributions being $212,580.28 + GST be accepted.

Motion CARRIED.

Yes: 3	No: 0	Abstain: 0	Inv: 0

Review & Acceptance of Sinking Fund

A community corporation requires a sinking fund under the *Community Titles Act 1996 Section 116 (3).* Non-recurrent expenditure must be made from the sinking fund and all other recurrent expenditure of the corporation must be made from the administrative fund.

Resolved, in accordance with the *Community Titles Act 1996 Section 116,* that the proposed sinking fund budget and consequently the annual contributions being $33,425.70 + GST be accepted.

Motion CARRIED.

Yes: 3	No: 0	Abstain: 0	Inv: 0

The sinking fund's purpose is not to offset recurrent expenditure of the Corporation (unless instructed so by the elected representatives) and is additional to the above administration budget.

Contributions

Both contributions are to be divided by lot entitlement and paid in quarterly instalments.

Forward Budget

In accordance with the *Community Titles Act 1996 Section 113(1aa)* and the *Community Titles Regulations 2001 Regulation 18A*, corporations that are 20+ lots, with improvements (including buildings or other structures) on the common property insured for $100,000 or more, must present a 5-year forward budget at each Annual General Meeting. This budget must include any proposed expenditure (other than ongoing costs) for a 5-year period.

Alternatives for Forward Budget

(Option A) To resolve to obtain an updated sinking fund analysis report for the purposes of long-term budgeting. This is to be sent to the management committee for further instructions once received.

(Option B) To resolve that a sinking fund analysis report is not required at this time as a sinking fund analysis has been carried out in the last 3 years.

'OPTION B' has been selected with the highest votes.

A: 0	B: 3	Inv: 0

UNPAID LEVIES POLICY

Approval of Debt Recovery Process for Arrears

Resolved as per *The Community Titles Act 1996 Section 114(8),* "a contribution, instalment or interest may be recovered as a debt", to adopt the revised policy of debt recovery, which is as follows:

- For levies unpaid 14 days after their due date, owner/s will receive a reminder letter and a text message (stage 1).
- For levies unpaid 60 days after their due date and greater than $50.00, the owner/s will receive a final notice outlining the cost associated with transferring the recovery to a lawyer and a text message (stage 2, cost $55.00).
- For levies unpaid 90 days after their due date and greater than $500.00, the owner/s will receive a notice outlining that the recovery of overdue levies will be transferred to a solicitors' office specialising in debt recovery (stage 3, cost $150.00).

Motion CARRIED.

Yes: 3	No: 0	Abstain: 0	Inv: 0

Munro is to be contacted if an owner is having difficulty paying on time, so fees are minimised or negotiated, interest charged may be waived if an adequate payment plan is maintained and adhered to.

Approval of Recovery of Debt Collection Fees

Resolved unanimously that all fees incurred by the Corporation associated with the debt recovery process (including, but not limited to, solicitors' fees and court costs) will be payable by the owner, recovered by the action and applied to the lot owner's account.

All costs initially will need to be met by the Corporation but will be recovered by the action and applied to the lot owner's account.

Motion CARRIED.

Yes: 3	No: 0	Abstain: 0	Inv: 0

Interest Charged on Overdue Accounts

As per the *Community Titles Act 1996 Section 14(b),* the Corporation may "fix (in accordance with the regulations) interest payable in respect of a contribution, or an instalment of a contribution, that is in arrears."

Resolved that the interest rate of 15% per annum remains in place and be applied to owners who fall in arrears with their payments.

Motion CARRIED.

Yes: 3	No: 0	Abstain: 0	Inv: 0

APPOINTMENT OF PUBLIC OFFICER

Under the *Income Tax Assessment Act 1936,* a person is required to be nominated to act as public officer for the Corporation. An owner can fill this position however this can present issues should ownership of the lot change at any time.

Resolved that Mr Joshua Baldwin of Munro act as Public Officer as defined under the *Income Tax Assessment Act 1936*.

Motion CARRIED.

Yes: 3	No: 0	Abstain: 0	Inv: 0

ENGAGEMENT OF AUDITOR

Resolved as per the *Community Titles Act 1996 Section 138* that NRM Johnson be engaged to audit the annual statement of accounts.

NRM Johnson is a registered company auditor within the meaning of the *Corporations Act 2001* of the Commonwealth.

Motion CARRIED.

Yes: 3	No: 0	Abstain: 0	Inv: 0

NEXT MEETING DATE & MEETING CLOSURE

The date and time for the next Annual General Meeting under consultation with the subcommittee. Dates for the subcommittee meetings will be sent out shortly for confirmation. There being no further business, the meeting was declared closed at 7:18 PM.

Munro Property Group Pty Ltd
136 The Parade NORWOOD SA 5067
08 8132 2000
bc@munroproperty.com.au
www.munroproperty.com.au

Approved Budget
to apply from 01/12/2024

Community Corporation No. 41143 Inc.

La Verde (Primary), 56-60 King William Street, KENT TOWN SA 5067

Administrative Fund

	Approved budget
Revenue	
Levies Due (Special)--Admin	12,420.91
Levies Due--Admin	203,000.00
Total revenue	215,420.91
Less expenses	
Admin - Contractor Compliance Management	273.84
Admin--Accounting--Tax Return	240.90
Admin--Auditors--Audit Services	200.00
Admin--Bank Charges--Account Fees	20.00
Admin--Consultant Fees	12,818.18
Admin--Consultant--BAS Prep. & Lodgement	400.00
Admin--Consultant--Comms/Data/Technology	3,272.72
Admin--Consultant--Meeting Fee	250.00
Admin--Consultant--Public Officer Fee	90.00
Admin--Telephone Charges--Fire Protection	1,418.18
Insurance--Premiums	65,000.00
Maint Bldg--Building Repairs--General	1,000.00
Maint Bldg--Caretaking	54,396.00
Maint Bldg--Cleaning--Windows/Glass	5,000.00
Maint Bldg--Consultant--General	2,775.00
Maint Bldg--Electrical--Repairs	454.55
Maint Bldg--Fire Protection	5,000.00
Maint Bldg--Fire Protection--Alarm Response	1,000.00
Maint Bldg--Fire Protection--Contract	5,410.00
Maint Bldg--Fire Protection--MFS Monitoring	1,020.00
Maint Bldg--Gate/Roller Door--Repair	500.00
Maint Bldg--Lift--Maintenance Contract	12,330.00
Maint Bldg--Lift--Registration Fees	90.91
Maint Bldg--Plumbing	500.00
Maint Bldg--Repairs--Automatic Doors	200.00
Maint Grounds - Garden maintenance	12,000.00
Utility--Electricity	14,500.00
Utility--Waste Management	15,100.00
Total expenses	215,260.28
Surplus/Deficit	160.63
Opening balance	20,852.71
Closing balance	$21,013.34

Administrative Fund

	Approved budget
Total units of entitlement	10000
Levy contribution per unit entitlement	$22.33
Budgeted standard levy revenue	203,000.00
Add GST	20,300.00
Amount to raise in levies including GST	$223,300.00

Sinking Fund

	Approved budget
Revenue	
Levies Due--Sinking	33,425.70
Total revenue	33,425.70
Less expenses	
Maint Bldg--General Replacement	5,990.00
Total expenses	5,990.00
Surplus/Deficit	27,435.70
Opening balance	152,189.81
Closing balance	$179,625.51
Total units of entitlement	10000
Levy contribution per unit entitlement	$3.68
Budgeted standard levy revenue	33,425.70
Add GST	3,342.57
Amount to raise in levies including GST	$36,768.27

FORM L Orig Jan
CUTD

LF 12823773

16:51 07-Nov-2017
4 of 14

LANDS TITLES REGISTRATION OFFICE

SOUTH AUSTRALIA

LODGEMENT FOR FILING UNDER THE COMMUNITY TITLES ACT 1996

FORM APPROVED BY THE REGISTRAR-GENERAL

BELOW THIS LINE FOR OFFICE PURPOSES ONLY

SERIES NO	PREFIX
4	LF

BY-LAWS.

AGENT CODE

LODGED BY: : **LYNCH MEYER** **MSLM**

CORRECTION TO: **MSLM**

SUPPORTING DOCUMENTATION LODGED WITH INSTRUMENT (COPIES ONLY)

1

2

3

4

5

PICK-UP NO.	
CP	

CORRECTION	PASSED
	MM

FILED 13/11/17

Mark McNeil

REGISTRAR-GENERAL

REGISTRAR-GENERAL SOUTH AUSTRALIA

PRIVACY COLLECTION STATEMENT: The information in this form is collected under statutory authority and is used for maintaining publicly searchable registers and indexes. It may also be used for authorised purposes in accordance with Government legislation and policy requirements.

© LAWSOFT PTY LTD (June 2016) Ref: 1710322

605484

COMMUNITY PLAN NO. C41143

COMMERCIAL AND RESIDENTIAL DEVELOPMENT

"VERDE"
COMMERCIAL AND RESIDENTIAL DEVELOPMENT
54-60 KING WILLIAM STREET, KENT TOWN

PRIMARY STRATA BY LAWS

Index

No		Page
1.	Interpretation and Definitions	4
2.	Administration Management and Control of Common Property	5
3.	Use and Enjoyment of the Common Property	6
4.	Use of Lots/Persons bound by these By-laws	7
5.	Variation of By-laws	7
6.	Development of Community Lots	7
7.	Noise	8
8.	Vehicles	8
9.	Obstruction	8
10.	Damage to Common Property	8
11.	Behaviour of Invitees	8
12.	Depositing Rubbish etc on Common Property	9
13.	Appearance of building	9
14.	Storage of Flammable Liquids etc	10
15.	Garbage disposal	11
16.	Keeping of animals	11
17.	Tenants to have notice of by-laws	12
18.	Observance of by-laws	12
19.	Lot to be kept clean	12
20.	Use of water etc	13
21.	Notice to be given	13
22.	Corporation may inspect	13
23.	Infectious diseases	13
24.	Unavoidable noise to be minimised	14
25.	Moving Articles	14

26. Committee may make rules 14

27. Lotholders not to instruct contractors/workmen 14

28. Use of lots - specific 15

29. Common Property - Special Privileges 15

30. Security 15

31. Corporation rights and powers - unpaid levies 16

32. Insurance 17

33. Severability 18

34. Offence 18

35. Penalty 18

36. Naming Rights and Signage Rights 19

37. Telecommunications Licence 19

38. Permits 19

39. Compensation to Corporation 20

40. No Trade or Business from Residential Lots 20

41. Building Warranties 20

42. Air Conditioning Equipment 21

43. Contributions by Owners 21

44. Retail/Commercial Lots 22

45. Caretakers Arrangements 22

Certified correctly by prepared in accordance with the requirements of the *Community Titles Act 1996* by the person who prepared the document

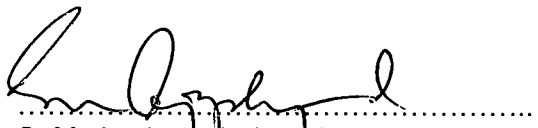

S. M. Appleyard - Legal Practitioner
190 Flinders Street
Adelaide SA 5000

COMMUNITY TITLES ACT

Primary Scheme By-Laws
Community Plan No. C41143

Part 1 - Preliminary

1. In these by-laws, unless the contrary intention appears:-

"*the Act*" - means the *Community Titles Act 1996*;

"*the Corporation*" means the Community Corporation No. C41143 Incorporated;

"*Corporation Manager*" means any party approved by the Corporation having the relevant expertise and experience to properly manage and perform the duties and functions of the corporation under the Act and Corporation Management Agreement means any such Agreement appointing the Corporation Manager pursuant to the Act;

"*develop*" includes:

(i) the construction or alteration of any building, structure, fence, wall or other external fixture or fitting;

(ii) any site works or landscaping;

(iii) any change to any improvement on the community lot;

and "*development*" has a corresponding meaning;

"*landscaping*" includes the provision and arrangement of trees, shrubs, ground covers, grassed areas, paving and similar site works;

"*improvement*" means any thing which has been done to the community lot by the development of the community lot;

"*motor vehicle*" includes motor cycle, caravan, boat and bicycle;

"*party wall*" includes the easement for support and shelter created under the Act;

"*visitors*" includes customers, invitees and clients of the owner or occupier of a community lot;

"*lot*" means a Community Lot comprised in Community Corporation Plan Number C41143, and includes a Strata Lot.

"*Lotholder*" means the owner of a lot and where the context allows the occupier of a lot.

"*Occupier*" of a lot includes, if the lot is unoccupied, the owner of the lot;

"*rules*" means the rules made by the Corporation pursuant to the powers contained in these by-laws;

a term defined in the Act has the same meaning when used in these by-laws unless the contrary intention appears.

a reference to any statute, regulation or Council by-law includes all amendments, consolidations or replacements of them;

one gender includes all the other genders;

the singular includes the plural and the other way around.

Part 2 - Mandatory By-laws

2. **Administration Management and Control of Common Property**

2.1. The Corporation is responsible for the tasks set out in the Act as the functions of the Corporation, and any additional functions given to it under these by-laws.

2.2. The Corporation is (in addition to its responsibilities under the Act) responsible for:

2.2.1. the repair, maintenance and planting of the landscaped areas of the Common Property;

2.2.2. the repair and maintenance of the driveway and car parking areas of the Common Property;

2.2.3. the repair, maintenance and replacement of any security lighting on the Common Property;

2.2.4. the repair, maintenance and replacement of any bitumen or paving bricks on the Common Property;

2.3. Any costs incurred by the corporation in fulfilling its functions under either or both the Act and these by-laws are recoverable from the owners of the Lots in proportion to the lot entitlement of each community lot.

2.4. In the administration, management and control of the Common Property, the corporation must ensure that these by-laws are adhered to by the persons that are bound by the by-laws. The Corporation has an obligation to enforce the by-laws for the benefit of the owners and occupiers of the Lots and for the benefit of the Corporation.

2.5. The Corporation may (but is not obliged to) establish a Management Committee ("the Committee") responsible to the Corporation for the administration, management and control of the Common Property.

2.6. The Corporation may appoint a manager to carry out, on behalf of the Corporation the function of administering, managing and controlling the Common Property.

2.7. The manager shall be appointed on a contract that is subject to annual review by the Corporation.

2.8. If on annual review the Corporation is dissatisfied with the Manager's performance the Corporation may terminate the Management Contract.

3. Use and Enjoyment of the Common Property

3.1. The Common Property is, subject to the Act and these by-laws for the common use and enjoyment of owners and occupiers in the community scheme and their visitors.

3.2. A person bound by these by-laws:

3.2.1. must not obstruct the lawful use of the Common Property by any person;

3.2.2. must not use the common property in a manner that unreasonably interferes with the use and enjoyment of the Common Property by the other persons bound by these by-laws or their visitors;

3.2.3. must not make, or allow that person's visitors to make, undue noise in or about the Common Property;

3.2.4. must not interfere, or allow that person's visitors to interfere, with other people in the enjoyment of their rights in relation to the Common Property;

3.2.5. must not park a motor vehicle in a parking space allocated for others on the Common Property, or alternatively, on a part of the Common Property on which parking is not authorised by the Corporation;

3.2.6. must take reasonable steps to ensure that their visitors do not park a motor vehicle in parking spaces allocated for others on the Common Property or on parts of the Common Property on which parking is not authorised by the Corporation;

3.2.7. must not repair motor vehicles on the Common Property;

3.2.8. must not drive a motor vehicle at a speed of greater than 10 km/hour on the Common Property;

3.2.9. must not damage or interfere with any landscaping on the Common Property;

3.2.10. must not use any portion of the Common Property for that person's garden;

3.2.11. must not display any sign, or any other conspicuous material of a similar nature on any part of the Common Property;

3.2.12. must not leave or store any items on the common property.

3.3. The Corporation may by ordinary resolution (unless the Act requires otherwise) approve the use of the Common Property in a manner inconsistent with these by-laws.

4. Use of Lots/Persons bound by these By-laws

4.1. Subject to the Act any other relevant legislation and these by-laws a person bound by these by-laws must not use a lot for a purpose unless the use is consistent with the Scheme Description, the By-laws and the use has been otherwise approved by the Corporation.

4.2. The following persons are bound by these By-laws:-

4.2.1. the Corporation;

4.2.2. the Lotholders and occupiers of the Community Lots comprising the Community Scheme;

4.2.3. persons entering the Community Parcel.

5. Variation of By-laws

5.1. These by-laws come into operation when the plan of community division is deposited in the Land Titles Registration Office.

5.2. These by-laws continue until varied or cancelled as provided for in the Act.

Part 3 - General Provisions

6. Development of Community Lots

6.1. The following by-laws regulate any future development on the community lots, and the word "*developer*" means any person who conducts any development on the community lot.

6.2. The developer must not develop a community lot unless the development complies with the requirements of these by-laws.

6.3. Any further development of any community lot which involves the alteration or destruction of a party wall, requires the prior written consent of any person with registered party wall rights.

6.4. The developer must only develop the community lot for a purpose allowed under the relevant development plan under the *Development Act 1993.*

6.5. The Corporation may by prior special resolution approve any development which would otherwise be in breach of these by-laws.

6.6. The scheme description lodged with these by-laws contemplates a secondary division of Lot 1001 (six (6) commercial/retail tenancies) Lot 1002 (seven (7) small office/home office – SOHO Apartment lots) and Lot 1003 (forty seven (47) residential apartments) and common property.

6.7. The Corporation will do all acts, matters and things and grant such approvals as may be required, to give effect to the intent of the scheme description and this by-law is authority for the Corporation to do so.

6.8. For avoidance of doubt, this by-law is intended to allow the secondary division and use of Lots 1001 and 1002 for all lawful uses granted by a relevant development authority, as the developer or subsequent owner may elect either before or after secondary division of Lots 1001 & 1002.

7. Noise

A person bound by these by-laws shall not create any noise on the Community parcel likely to interfere with the peaceful enjoyment of a Lot holder or occupier of another lot or of any person lawfully using Common Property.

8. Vehicles

In addition to any other power, authority, duty or function imposed or conferred on the Corporation, it shall have the power to tow away any motor vehicle parked or standing in contravention of these by-laws at the expense of the person whose act or default has caused the contravention and that person shall indemnify the Corporation for all costs and damages arising out of such actions.

9. Obstruction

A person bound by these by-laws must not obstruct lawful use of Common Property by any person.

10. Damage to Common Property

A person bound by these by-laws must not mark, paint drive nails or screws or the like into, or otherwise damage or deface, any structure that forms part of the improvements on the Community Parcel, or Common Property except with the consent of the Corporation.

11. Behaviour of Invitees

11.1. A person bound by these by-laws shall take all reasonable steps to ensure that his invitees do not behave in a manner likely to interfere with the peaceful enjoyment of another Lotholder or occupier or of any person lawfully using Common Property.

11.2. A person bound by these by-laws shall be liable to compensate the Corporation in respect of all damage to the Common Property or personal property vested in it caused by such person.

11.3. The owner of a lot which is the subject of a lease or licence agreement shall take all reasonable steps, including any action available to that owner under any such lease or licence agreement, to ensure that any lessee or licensee or other occupier of the lot or their invitees comply with the provisions of the by-laws.

11.4. The duties and obligations imposed by these by-laws on a Lotholder or occupier of a lot must be observed not only by the Lotholder or occupier and also by their guests, servants, employees, agents, children, invitees and licensees of such Lotholder or occupier.

12. Depositing Rubbish etc on Common Property

12.1. A person bound by these by-laws must not deposit or throw upon the Common Property any rubbish, dirt, dust or other material likely to interfere with the peaceful enjoyment of the Lotholder or occupier of another lot or of any person lawfully using the Common Property.

12.2. A person bound by these by-laws must not throw or allow to fall or permit or suffer to be thrown or to fall any paper, rubbish, refuse, cigarette butts or other substance whatsoever out of the windows or doors or down staircases, from balconies, from the roof or in the passageways of any building on the Community Parcel. Any damage or costs for cleaning or repair caused by breach hereof shall be borne by the Lotholder or occupier.

12.3. A person bound by these by-laws must segregate and place all rubbish in the Recycled or General:

12.3.1. waste bins (provided by the Corporation) at Level 1; or

12.3.2. in the waste bins via the Recycled or General chutes provided for Levels 2-5.

13. Appearance of building

13.1. A person bound by these by-laws must not, except with the consent in writing of the Corporation:

13.1.1. hang any washing, towel, bedding, clothing or other article or display any sign, advertisement, placard, banner, pamphlet or like matter on any part of his lot in such a way as to be visible from outside any building on a lot;

13.1.2. place other than outdoor settings, chairs, barbeque (no charcoal or bottled gas) and plants on any balcony or verandah of a lot.

13.2. A Lotholder or occupier must not:-

13.2.1. erect or affix any curtains, blinds, or awnings to the inside or outside of his lot or the building;

13.2.2. affix any fittings to exterior walls or ceilings of his lot or the building;

without the prior written consent of the Corporation and must comply with the directions and requirements of the Corporation, including without limitation, style and colour of window treatments.

Blinds, awnings and curtain backing to outside windows visible from the streetscape must be in a neutral shade of off white/ivory to maintain uniform visual amenity to the streetscape.

13.3. For avoidance of doubt the Developer proposes to procure, at the first meeting of the Corporation, a resolution affirming the Developer's nominated specification of window treatments (outside colour), balcony barbecues,

balcony tables, balcony chairs, pots and pot plants which Lotholders or occupiers are entitled to install or place on or in a Lot or subsidiary, to maintain uniform visual amenity from the streetscape. Outside wireless, two-way radio and television aerials or satellite receivers must not be erected without the prior written permission of the Corporation.

13.4. No structural alteration shall be made to any lot (including any alterations to gas, water supply, plumbing or electrical installations and including the installation of any air conditioning system) without the prior written permission of the Corporation.

13.5. A Lotholder or occupier must not paint or affix any advertisements, placards, banners, pamphlets, notices or posters to or on any part of the exterior of his lot nor do anything to vary the external appearance of his lot or the building without the prior written consent of the Corporation **PROVIDED ALWAYS** that whilst the owner of a lot at plan deposit (developer) remains owner of more than one lot it or its respective servants and/or agents may without the consent of the Corporation paint or affix any signs advertisements notice or notices or posters to or on any part of the premises for the purposes of offering for sale or lease any lot.

13.6. This clause 13 does not preclude a Lotholder or occupier of a Commercial/Retail Lot (Lots 1 and 2) from displaying signs or signage used in the normal course of its business, subject to:

13.6.1. conformity with the Developers themes (size, colour);

13.6.2. obtaining all necessary approvals from a relevant development authority; and

13.6.3. any requirements of the secondary By Laws of Lots 1001 and 1002.

13.7. The Corporation shall at regular intervals paint and maintain the exterior facade of any building in colours and to a standard commensurate with the development and keep the Common Property in a state of good and serviceable repair and properly maintain all chattels, fixtures and fittings (including walkways, stairways, lifts, handrails, intercoms and security equipment (if any)) held by the Corporation or used in connection with the Common Property or its enjoyment by Lotholders or occupiers and visitors and for this purpose enter into an appropriate contract or contracts with third parties for such parties to provide those services for the benefit of Lotholders on behalf of the Corporation.

14. Storage of Flammable Liquids etc.

14.1. A Lotholder must not, except with the consent in writing of the Corporation, use or store on a lot or on the Common Property any flammable chemical, liquid or gas or other flammable material, other than chemicals, liquids, gases or other material used or intended to be used for domestic purposes, or any such chemical, liquid, gas or other material in a fuel tank of a motor vehicle or internal combustion engine or domestic cleaning chemicals.

14.2. A Lotholder or occupier must not bring to, do or keep anything in his lot which will increase the rate of fire insurance on any building or any property on a lot or which may conflict with the laws and/or regulations relating to fires or any insurance policy upon the building or any property on the Community Parcel or the regulations or ordinances of any public authority for the time being in force.

14.3. If a Lotholder or occupier does or permits to be done any act matter or thing which has the effect of invalidating or avoiding any policy of insurance taken out by the Corporation then such Proprietor or Occupier shall be responsible for any damage or loss which the Corporation or any other Lotholder may suffer or incur as a result thereof.

14.4. If the Corporation consents to a Lotholder or occupier bringing to doing or keeping anything in his lot which increases the rate of fire insurance on any building or on any property on a lot, such Lotholder or occupier must pay the amount of any increased premium to the Corporation upon demand.

15. Garbage disposal

15.1. A Lotholder or occupier of a lot must:-

15.1.1. save where the Corporation provides some other means of disposal of garbage, (which other means of disposal will be adhered to by the Lotholder or occupier) maintain within his lot, or on such part of the Common Property as may be authorised by the Corporation, in clean and dry condition and adequately covered, a receptacle(s) for garbage;

15.1.2. comply with all local authority by-laws and ordinances relating to the disposal of garbage;

15.1.3. ensure that the health, hygiene and comfort of the Lotholder or occupier of any other lot is not adversely affected by his disposal of garbage.

15.2. Garbage receptacles shall be placed only where approved by the Corporation and used only for the purpose for which they are provided:

15.2.1. Empty bottles, boxes, used containers and similar items shall be placed in Recyled and General waste chutes, and/or Recycled and General waste bins provided by the Corporation;

15.2.2. The car parking areas shall be kept tidy and free of all litter.

16. Keeping of animals

16.1. A person bound by these by-laws must not keep an animal (without the prior written consent of the Community Corporation), in or in the vicinity of a lot but this by-law 16 does not:-

16.1.1. prevent an occupier of or visitor to a lot who suffers from a disability from keeping a "relevant animal" (as defined in the Act) in or in the

vicinity of a lot or common property, if trained to assist the occupier in respect of that disability;

16.2. Where a person bound by these by-laws (with the consent of the Corporation or pursuant to clause 16.1.1) brings or keeps an animal on a lot or any other part of the common property that person is:-

16.2.1. liable to the proprietors or occupiers of all other lots comprised in the Plan of Community Division, and all other persons lawfully on the common property for any act or noise which is disturbing to an extent which is unreasonable, and for damage to, or loss of property or injury to any person caused by the animal; and

16.2.2. responsible for cleaning up after the animal has fouled any part of another lot or any part of the common property.

17. **Tenants to have notice of by-laws**

A copy of these By-laws (or a precis thereof approved by the Committee) shall be delivered to the Lessee or occupier of any lot not personally occupied by the Lotholder and in any event incorporated as an annexure to any Lease or Licence granted to a Lessee or occupier.

18. **Observance of by-laws**

The duties and obligations imposed by these By-laws on a Lotholder must be observed by the Lot holder and the Lot holder's occupiers tenants, guests, servants, employees, agents, children, invitees and licensees.

19. **Lot to be kept clean**

Each Lotholder or occupier shall:-

19.1. keep his lot clean and take all practicable steps to prevent infestation by vermin and/or insects;

19.2. keep his windows in a thorough state of cleanliness and promptly notify the Corporation for their replacement with new glass of the same kind and weight as at present if broken or cracked;

19.3. not install or provide any window tinting to any external window of his lot;

19.4. be responsible for the interior cleanliness, maintenance and decoration of his lot, including balcony and courtyard glass and balcony balustrade rails even though that may be classified as common property;

19.5. take every reasonable precaution to prevent water overflowing on any other Lot, Subsidiary or common property when cleaning a balcony area or watering plants on a balcony.

20. **Use of water etc**

20.1. A Lotholder or occupier must not waste the water and shall see that all water taps in his lot are promptly turned off after use.

20.2. The water closets, conveniences and other water apparatus including waste pipes and drains must not be used for any purposes other than those for which they were constructed and no sweepings or rubbish or other unsuitable substance shall be deposited therein. Any damage or blockage resulting to such water closets, conveniences, water apparatus, waste pipes and drains from misuse or negligence shall be borne by the Lotholder whether the same is caused by his own actions, or those of his tenants, servants, agents, guest, employees, invitees, or licensees.

20.3. The Corporation may advise SA Water that all water charges will be billed directly to the Lotholder by SA Water in accordance with Lot entitlements.

21. **Notice to be given**

A Lotholder or occupier must give the Corporation prompt notice of any accident to or defect in the water pipes, gas pipes, electric installations or fixtures which comes to his knowledge and the Corporation shall have authority by its agents or servants in the circumstances having regard to the urgency involved to examine or make such repairs or renovations as they may deem necessary for the safety and preservation of the said building as often as may be necessary.

22. **Corporation may inspect**

22.1. Subject to giving reasonable written notice (without notice in the case of emergency) the Corporation and its servants, agents and contractors shall be permitted to inspect the interior of any lot and to test any electrical, gas or water installation or equipment therein and to trace and repair any leakage or defect in the said installation or equipment (at the expense of the Lotholder in cases where such leakage or defect is due to any act or default of the said Lotholder or his tenants, guests, servants, agents, employees, invitees or licensees). If not so permitted they may effect an entry. The Corporation, in exercising this power, shall ensure that its servants, agents and employees cause as little inconvenience to the Lotholder or occupier as is reasonable in the circumstances.

22.2. All doors and windows to the premises shall be securely fastened on all occasions when any premises are left unoccupied and the Corporation reserves the right to enter and fasten the same if left insecurely fastened.

23. **Infectious diseases**

In the event of any infectious disease which may require notification by virtue of any Statute, Regulation or Ordinances affecting any person in any lot the Lotholder or occupier of such lot must give or cause to be given written notice thereof and any other information which may be required relative thereto to the Corporation and shall pay to the Corporation the expenses of disinfecting the lot and building and replacing any articles or things the destruction of which may be rendered necessary by such disease.

24. Unavoidable noise to be minimised

In the event of any unavoidable noise in a lot at any time the Lotholder or occupier thereof must take all practical means to minimise annoyance to other occupants by closing all doors, windows and curtains of his lot and also such further steps as may be within his power for the same purpose.

25. Moving Articles

The Lot Holder or Occupier must comply with and observe the following conditions and restrictions for delivery or movement of goods or furniture to and from a Lot:

25.1. goods or furniture may be delivered by appointment with the caretaker and to and from the Lot only through such entrances (Southern side via Little Rundle Street and using Service Lane on Western side – "3 tonne" truck limit) at such times and in such manner as will ensure minimum interference with persons using the entrances or Common Property and will be subject to the prior approval of and under the supervision of the Corporation;

25.2. goods or furniture being moved to or from a Lot shall only be carried in the lift installed in the Building (if any) designated for the purpose of carrying goods or furniture (the "**Goods Lift**") but in carrying the goods or furniture in the Goods Lift priority shall at all times be given to passenger traffic;

25.3. before goods or furniture are carried in the Goods Lift the sides of the Goods Lift shall be covered in such manner as the Corporation directs to prevent scratching or damage;

25.4. goods or furniture must not be left on the Common Property at any time and if so left may be removed by the Corporation at the expense and risk of the Lot Holder; and

25.5. appropriate measures must be taken to ensure that the security of the Building is maintained at all times while goods or furniture are being delivered to or removed from the Building.

26. Committee may make rules

Subject to the Act, the Corporation or its appointed manager may make rules relating to the Common Property not inconsistent with these by-laws and the same shall be observed by the Lotholders and their tenants, servants, agents, guests, employees, invitees or licensees unless and until they are disallowed or revoked by an ordinary resolution at a general meeting of the Lotholders.

27. Lotholders not to instruct contractors/workmen

Lotholders must not directly instruct any contractors or workmen employed by the Corporation unless so authorised, and all requests for consideration of any particular matter to be referred to the Corporation shall be directed to the Secretary or Corporation Manager and not to the Presiding Officer or any member of the Corporation.

28. **Use of lots - specific**

Subject to the provisions of these by-laws, the Scheme Description and the Development Plan for the Corporation of the City of Norwood, Payneham and St Peters and any other relevant Statutory enactments:

28.1. Lot 1003 will only be used for residential accommodation.

28.2. Lots 1001 & 1002 are presently intended to be configured respectively as six (6) commercial/retail and seven (7) secondary SOHO lots, (subject to determination of final configuration and use in accordance with market conditions as referred to in clause 2 of the Primary Scheme Description) including but not limited to offices, professional rooms, licensed restaurants, bistros/coffee shops, gift shops, staff facilities, staff room, foyer, storage (including garbage storage), waiting and reception purposes, management, the letting of lots in the Building, the rendering of services to occupants of lots and other commercial and retail business purposes approved by a relevant development authority.

28.3. Secondary SOHO lots, as discrete from and with separate access from adjoining street frontage are at their election entitled to use for such as "Air BNB", subject to any relevant development authority approval, if required.

28.4. Other than uses specified in Clauses 28.1 - 28.3 a Lotholder or occupier is prohibited from leasing or granting rights of occupation in respect of a Lot for valuable consideration for a period of less than two (2) months.

This clause 28 does not preclude a Lotholder entering into a Lease, Licence or Management Agreement on normal commercial terms for use of that lot in accordance with a use authorized by a relevant development authority.

29. **Common property - Special privileges (See Clause 43)**

29.1. With the written consent of the original proprietor which is hereby acknowledged the Corporation may confer special privileges in respect of the common property to use the same in connection with such business operations lawfully carried out in accordance with relevant development authority approval in respect of the primary lots (whether divided by secondary division or not) and without limiting the generality of the foregoing the uses contemplated in clause 28, but the Corporation shall continue to be responsible for carrying out its duties pursuant to the Act in respect of the common property generally.

29.2. This clause 29 may not be changed except by unanimous resolution.

30. **Security**

30.1. The corporation may take all reasonable steps to ensure the security of the Community Parcel and property of the Corporation and the observance of these by-laws and without limiting the generality of the foregoing, may:-

30.1.1. close off any part of the Common Property not required for ingress or egress to a lot or a parking space on either a temporary or permanent

basis or otherwise restrict the access to or use by Lotholders or occupiers of any such part of the Common Property;

30.1.2. permit any designated part of the Common Property to be used by any security person, firm or company to the exclusion of Lotholders or occupiers generally as a means of monitoring the security and general safety of the Community Parcel; and

30.1.3. obtain, install and maintain any locks, alarms, communication system or any other security device.

30.2. If the Corporation in the exercise of any of its powers under these by-laws restricts the access of Lotholders or occupiers to any part of the Common Property by means of any lock or similar security device it may make such number of keys or operating systems (if any) as it determines available to Lotholders free of charge and thereafter may at its discretion make additional numbers thereof available to Lotholders upon payment of a reasonable charge as may be determined from time to time by the Corporation.

30.3. The Lotholder of a Lot to whom any key or any operating system is given pursuant to these by-laws shall exercise a high degree of caution and responsibility in making the same available for use by any occupier of a lot and shall take reasonable precautions (which shall include an appropriate covenant in any lease or licence of a lot to any such occupier) to ensure the return thereof to the Lotholder or the corporation upon the occupier ceasing to be an occupier.

30.4. A Lotholder or occupier of a lot into whose possession any key or operating system referred to in these by-laws has come shall not without the prior written approval of the Corporation duplicate the same or cause or permit the same to be duplicated and shall take all reasonable precautions to ensure that the same is not lost or handed to any person other than another Lotholder or occupier and is not disposed of otherwise than by returning it to the Corporation.

30.5. A Lotholder or occupier of a lot who is issued with a key or operating system referred to in these by-laws shall immediately notify the Corporation if the same is lost or misplaced.

31. **Corporations rights and powers - unpaid levies**

31.1. A Lotholder (which expression shall extend to a corporation and a mortgagee in possession) must pay on demand:-

31.1.1. the whole of the Corporation's costs and expenses (including Solicitors and own client costs) incurred in recovering levies or moneys duly levied upon that Lotholder's Lot in the Plan by the Corporation pursuant to the Act or pursuant to the by-laws of the Corporation;

31.1.2. such costs as may have been ordered to be paid by the Lotholder to the Corporation by any Court Tribunal or body with authority to order the payment of costs.

31.2. In the event that the Lotholder fails to attend to the payment of such costs and expenses after demand is made for the payment of same, the Corporation may take action for the recovery of same in any Court of competent jurisdiction with the proviso that, in respect of the Corporation's party and party costs, the Corporation shall comply with any procedure for the taxation and recovery of costs provided for in the rules of the Court, Tribunal or other body which orders payment in costs in favour of the Corporation. The Corporation may also enter any costs payable to it as referred to in paragraphs 31.1 above against the levy account of the Lotholder's Lot in the Plan and note the amount of such costs on any certificate issued in respect of the Lot pursuant to the *Real Property Act*.

31.3. If a contribution levied under the Act is unpaid 30 days after it falls due for payment, then the amount of the unpaid contribution will bear interest thereafter at an annual rate as determined by the Corporation from time to time, unless otherwise determined by Ordinary Resolution at a general meeting. At the discretion of the Committee, any Corporation Manager has administrative discretion to write off interest at a limit to be determined by the Corporation from time to time.

31.4. If at the time a person becomes the Lotholder of a lot, another person is liable in respect of the lot to pay interest on a contribution, the Lotholder is jointly and severally liable with the other person for the payment of the interest.

31.5. The amount of any interest is recoverable by the Corporation as a liquidated debt.

31.6. Where the Corporation expends money to make good damage caused by a breach of the Act, or of these by-laws by any Lotholder or the tenants, occupiers, guests, servants, employees, agents, children, invitees or licensees of the Proprietor or any of the them the Corporation shall be entitled to recover the amount so expended as debt in an action in any Court of competent jurisdiction from the Proprietor of the lot at the time when the breach occurred.

32. Insurance

The Corporation must effect all insurance required to be effected by a community corporation pursuant to the Act., The costs of arranging Insurance(s) in terms of this By-law are to be recovered from the owners of the Lots proportionate to their Lot entitlements.

32.1. The Community Corporation must review, on an annual basis:-

32.1.1. all insurance effected by it; and

32.1.2. the need for new or additional insurances.

32.2. Notice of an Annual General Meeting must include a form of motion to decide whether insurance(s) effected by the Community Corporation should be confirmed, varied or extended; and

32.3. The Community Corporation must immediately effect new insurances or vary or extend insurances if there is an increase in risk or a new risk to Common Property or the Community Corporation.

32.4. A Lotholder or occupier must not do anything that might:-

32.4.1. void or prejudice insurance effected by the Community Corporation; or

32.4.2. increase any insurance premium payable by the Community Corporation.

32.5. A retail or commercial lotholder shall carry its own third party property and bodily insurance on the retail lot extending to cover any person occupying the lotholder's retail lot.

32.6. The policy of insurance to be carried by the retail lotholder must be issued by a company approved by the Corporation and must give such cover as the Corporation in its absolute discretion may require, the minimum requirements being that such a policy of insurance must give cover for loss or damage to property or person of third parties to a minimum of $20 million in respect of any one accident or event.

32.7. Proof of coverage by way of a copy of the retail or commercial lotholder's current receipt of insurance schedule must be supplied to the Corporation on request.

33. **Severability**

If any by-law or any part of these by-laws cannot be given effect or full force and effect by reason of statutory invalidity or otherwise such by-law or part by-law as the case may be which cannot be given effect or its full force and effect shall be severed, ignored or read down restrictively but so as to maintain and uphold as far as possible the remaining by-laws.

34. **Offence**

Any person who contravenes or fails to comply with the provisions contained in these by-laws or Rules is guilty of an offence.

35. **Penalty**

The maximum penalty for the breach of any of these by-laws or the Rules is such amount as may from time to time be prescribed by the Act presently:

- used for business or commercial purposes - $2,000.00
- any other case - $500.00.

36. **Naming Rights and Signage Rights**

The owner from time to time of Secondary Strata Lot 1 in C41144 (the Retail Store) shall be entitled for no licence fee to have the following rights:

36.1. the sole and exclusive right to determine the name of the building including the right to grant to such other parties as that owner shall determine in its absolute discretion naming rights in respect of the Building; and

36.2. the sole and exclusive right to grant to owners or Occupiers of the Building or third parties the right to erect signage on the Common Property including without limitation the roof and appropriate locations on the external walls forming part of the Common Property. In exercising its rights pursuant to this By-Law the owner must comply with the provisions of By-Law 13.6.2 (approvals), provided that the owner shall not be obliged to comply with the other provisions of By-Law 6;

36.3. the owner of the Retail Store shall be solely responsible for any costs and expenses incurred in respect of that portion of the Common Property upon which signage is erected pursuant to this By-law including all costs of repair and maintenance together with all costs incurred in respect of electricity supplied to any such signage.

37. **Telecommunications Licence**

The owner from time to time of the Retail Store shall be entitled for no licence fee to have the following rights:

37.1. the sole and exclusive right to install and maintain on that portion of the Common Property comprising the roof such telecommunications equipment as the owner shall in its absolute discretion determine including without limitation antennas, receivers, radio transmitters and associated cabling;

37.2. the sole and exclusive right to grant to owners or Occupiers of the Building or third parties the right to place telecommunications equipment on those portions of the Common Property comprising the roof. In exercising its rights pursuant to this by-law the owner must comply with the provisions of by-law 13.6.2 (approvals), provided that the owner shall not be obliged to comply with the other provisions of by-law 6; and

37.3. the owner of Secondary Strata Lot 1 shall be solely responsible for any costs and expenses incurred in respect of those portions of the Common Property upon which any equipment is erected pursuant to this By-law including all costs of repair and maintenance together with all costs in respect of electricity supplied to that equipment.

38. **Permits**

38.1. In any By-Law of the Corporation, unless the contrary intention is clearly indicated, the words "the consent of the Corporation" means the permission of the Corporation given in the form of a written permit.

38.2. The Corporation shall have the power to grant permits in respect of any activity in or on the Community Parcel.

38.3. The Corporation may attach such conditions to a permit as it thinks fit and may vary or revoke such conditions or impose new conditions by notice in writing to the permit holder.

38.4. The Corporation may grant a permit either for a term of up to twelve (12) months or for an identified activity or schedule of activities as it thinks appropriate.

38.5. A permit holder shall comply with each and every condition of the permit.

Each event which is a breach of the permit shall constitute a separate offence under these By-Laws.

38.6. A permit holder shall pay to the Corporation in advance, such fee as may be determined by the Corporation for the Corporation issuing the permit to the permit holder.

38.7. Subject to the terms of the permit, the Corporation may cancel, suspend or revoke the permit at any time by notice in writing to the permit holder.

39. Compensation to Corporation

39.1. The proprietor or Occupier of a Lot shall compensate the Corporation in respect of any damage to the Common Property or personal property vested in the Corporation caused by that proprietor or Occupier or their respective tenants, licensees or invitees.

39.2. In circumstances where the Corporation arranges for a service call to the Community Parcel and the reason for that service call relates to a particular lot or lots or is necessitated by reason of an act or omission of an owner or Occupier then the Corporation shall be entitled to recover the costs incurred in respect of such service call directly from the relevant owner or Occupier.

40. No Trade or Business From Residential Lots

40.1. The owner or Occupier of a Residential Lot must not use that Lot or any part of the Common Property for any trade or business including the sale or offering for sale of any goods or merchandise nor permit others to do so.

40.2. The Owner or Occupier of the Retail/Commercial Lots and SOHO Lots may carry on a trade or business from the relevant Lot, provided:

40.2.1. the development plan governing the use of that Lot permits the trade or business to be carried on from that Lot;

40.2.2. any requirements in respect of the trade or business stipulated by any relevant authority from time to time are complied with;

40.2.3. the trade or business can be carried on and is carried on without causing undue nuisance to the proprietors and Occupiers of other Lots; and

40.2.4. in respect of Retail/Commercial and SOHO Lots only the trade or business must not be undertaken outside the hours of 7.00 a.m. to 10.30 p.m. Sunday-Thursday and 7.00 a.m. to 11.30 p.m. on Friday and Saturdays and Public Holidays.

41. **Building Warranties**

The Corporation will, if the Developer is able to procure the Builder so to do, enter into a Deed with the Builder pursuant to which Deed the Builder will provide to the Corporation warranties in form similar to the statutory warranties contained in Section 32(2) of the Building Work Contractors Act 1995 with intent that the Corporation may directly enforce a breach of those warranties by the Builder. The Deed will incorporate the warranties contained in section 32(2) of the Building Work Contractors Act 1995 and otherwise be in a form reasonably satisfactory to the Corporation the Builder and the Developer.

42. **Air Conditioning Equipment**

42.1. All air conditioning equipment including condensers which provide air conditioning services exclusively to individual Lots will be situated on the Primary Common Property.

42.2. In the event that any air conditioning equipment referred to in By-Law 42.1 or any part thereof including any condenser is situated on the Common Property then the owner of that equipment will have an easement appurtenant to the owner's Lot over the Common Property by virtue of the operation of Section 24(1)(c)(i) of the Act.

43. **Contributions by Owners**

43.1. In determining the financial contribution to be levied against Lotholders, the Corporation must have regard to the benefit derived by the Lotholders in respect of the relevant expenditure for which the contribution is to be levied.

43.2. Without limiting the provision of the By-Law 43.1:

43.2.1. Lotholders will not be required to contribute towards costs and expenses incurred in respect of any common property to which a Lotholder does not have access or in respect of common property including infrastructure and plant and equipment which does not service the Lotholders Lot.

43.2.2. By way of example - the Lotholders and occupiers of the secondary "Retail/Commercial" and "SOHO" Lots shall not without the consent of the Corporation be entitled to access any part of the building other than the relevant Retail/Commercial Lot and SOHO of which they are the owner or Occupier any common property forming part of the Retail/Commercial and SOHO lots secondary scheme (i.e., lift access restriction to Levels 3, 4 and 5).

43.3. The Corporation authorizes and directs the body corporate manager to apply this clause in respect of an appropriate adjustment and determination of contributions and sinking fund levies, other than in accordance with the schedule of lot entitlements, pursuant to section 114 (3) of the Act.

44. Retail/Commercial Lots

44.1. This By-Law shall apply only to the Retail/Commercial Lots.

44.2. A grease arrestor to the extent that one is required in respect of a Retail/Commercial Lot can only be located either:

44.2.1. in that portion of the common property in the basement of the Building marked "Grease Arrestor Tank" ("Grease Arrestor Tank"); or

44.2.2. in such other part of the Common Property as the Corporation shall approve.

44.2.3. The Corporation must allow the connection and installation by the Developer or an Owner or Occupier of a Retail/Commercial Lot of a grease arrestor in the area marked "Grease Arrestor Tank" and must not unreasonably withhold its consent to the installation of a grease arrestor pursuant to By-law 44.2.2 and must further permit the installation and connection of all plumbing from the grease arrestor in the Grease Arrestor Tank or such other approved area to the relevant Community Lot.

45. Caretaker Arrangements

45.1. The Developer will appoint a resident caretaker ("Caretaker") (owner/builder associated with the Developer) to carry out and effect maintenance repairs and "janitor" services for and to the Common Property pursuant to a formal contractual agreement on reasonable terms determined by the Developer ("Caretaker Agreement"),

45.1.1. from Plan Deposit for a period of 3 months, at its cost

45.1.2. thereafter at the cost of the Corporation;

and may require the Corporation to enter into a Caretaker Agreement with the Caretaker (as a direct agreement or as an assignment), and a Lotholder and the Corporation shall do all things reasonably necessary to give effect to the intent of this clause.

PURPOSE: PRIMARY COMMUNITY STRATA

AREA NAME: KENT TOWN

MAP REF: 6628/42/H

COUNCIL: THE CORPORATION OF THE CITY OF NORWOOD PAYNEHAM AND ST. PETERS

LAST PLAN: F58965

DEVELOPMENT NO: 155/C025/17/001/49609

APPROVED:
STEVE ANDREWS
04/10/2017

DEPOSITED:
MARK MCNEIL
13/11/2017

C41143

SHEET 1 OF 9

58767_text_01_v04_Version_4

AGENT DETAILS: JOHN C BESTED & ASSOCIATES PTY LTD
362 MAGILL RD
KENSINGTON PARK SA 5068
PH: 83327111
FAX: 83641829

AGENT CODE: JCBA

REFERENCE: 17160.3

SURVEYORS CERTIFICATION: I ASHLEY GREG WINDOW , a licensed surveyor under the Survey Act 1992, certify that (a) I am uncertain about the location of that part of the service infrastructure shown between the points marked > and < on the plan; and (b) This community plan has been correctly prepared in accordance with the Community Titles Act 1996
28th day of September 2017 Ashley Window Licensed Surveyor

SUBJECT TITLE DETAILS:

PREFIX	VOLUME	FOLIO	OTHER	PARCEL	NUMBER	PLAN	NUMBER	HUNDRED / IA / DIVISION	TOWN	REFERENCE NUMBER
CT	5192	227		ALLOTMENT(S)	7	F	108223	ADELAIDE		
CT	5088	528		ALLOTMENT(S)	17	F	100071	ADELAIDE		
CT	5088	529		ALLOTMENT(S)	18	F	100071	ADELAIDE		
CT	5720	848		ALLOTMENT(S)	173	F	211769	ADELAIDE		

OTHER TITLES AFFECTED:

EASEMENT DETAILS:

STATUS	LAND BURDENED	FORM	CATEGORY	IDENTIFIER	PURPOSE	IN FAVOUR OF	CREATION
EXTINGUISH	18 IN F100071	SHORT	FREE AND UNRESTRICTED RIGHT(S) OF WAY	A IN F100071		17 IN F100071	
NEW	COMMON PROPERTY	SERVICE	EASEMENT(S)	C(T/F)	FOR ELECTRICITY SUPPLY PURPOSES	DISTRIBUTION LESSOR CORPORATION (SUBJECT TO LEASE 8890000)	223LG RPA

ANNOTATIONS: LOT 1001 EXISTS AT BASEMENT, LEVEL ONE-GROUND FLOOR, LEVEL TWO-FIRST FLOOR, LEVEL THREE-SECOND FLOOR, LEVEL FOUR-THIRD FLOOR, LEVEL FIVE-FOURTH FLOOR AND ROOF LEVEL.
LOT 1002 EXISTS AT LEVEL ONE-GROUND FLOOR AND LEVEL TWO-FIRST FLOOR
LOT 1003 EXISTS AT LEVEL ONE-GROUND FLOOR, LEVEL TWO-FIRST FLOOR, LEVEL THREE-SECOND FLOOR, LEVEL FOUR-THIRD FLOOR AND LEVEL FIVE-FOURTH FLOOR.
ENCROACHMENT OF CANOPY A. CANOPY B. FEATURE PANEL A. FEATURE PANEL B. FEATURE PANEL C. FEATURE PANEL D. FEATURE PANEL E. FEATURE PANEL F. FEATURE PANEL G AND FEATURE PANEL H OCCURS OVER KING WILLIAM STREET

KING WILLIAM STREET

FEATURE PANELS

CANOPY 56°37'20" 60.17 CANOPY

① x (3.10) (3.50) C(T/F) 3.10 146°31'50" x ② 80.31

326°31'50" 48.12

SEVEN LEVEL BUILDING

48.09 146°39'40"

F100071

146°44'

ROAD

F125592

COLLEGE

x 60.06 236°35'10" x 80.25

LITTLE RUNDLE STREET

SITE PLAN

0 2.5 5 7.5 10 12.5

SCALE - METRES

C41143

SHEET 2 OF 9

58767_pland_1_V02_Version_4

BEARING DATUM: ① - ② 56°37'20"
DERIVATION: F58965 ADOPTED

TOTAL AREA : 2892m²

JOHN C BESTED & ASSOC PTY LTD
ABN 96 004 596 908
SURVEYING & PLANNING CONSULTANTS
362 MAGILL ROAD KENSINGTON PARK 5068
PHONE (08) 8332 7111 FAX (08) 8364 1829
email surveyors@johnbested.com.au

REF 17160.3 | DRAWING 17160.3-COM | VERSION 7

C41143

SHEET 3 OF 9

58767_pland_2_V02_Version_4

KING WILLIAM STREET

RETENTION TANKS

1001

LIFT PIT

LIFT PIT

F125592

F100071

LITTLE RUNDLE STREET

BASEMENT

0 2.5 5 7.5 10 12.5

SCALE - METRES

JOHN C BESTED & ASSOC PTY LTD

ABN 96 004 596 908

SURVEYING & PLANNING CONSULTANTS

362 MAGILL ROAD KENSINGTON PARK 5068

PHONE (08) 8332 7111 FAX (08) 8364 1829

email surveyors@johnbested.com.au

REF	DRAWING	VERSION
17160.3	17160.3-COM	7

C41143

SHEET 4 OF 9

58767_pland_3_V02_Version_4

OF.....OUTSIDE FACE
CONC.....CONCRETE
COL.....COLUMN
PROD.....PRODUCTION
OFW.....OUTSIDE FACE WALL
STT.....STRAIGHT

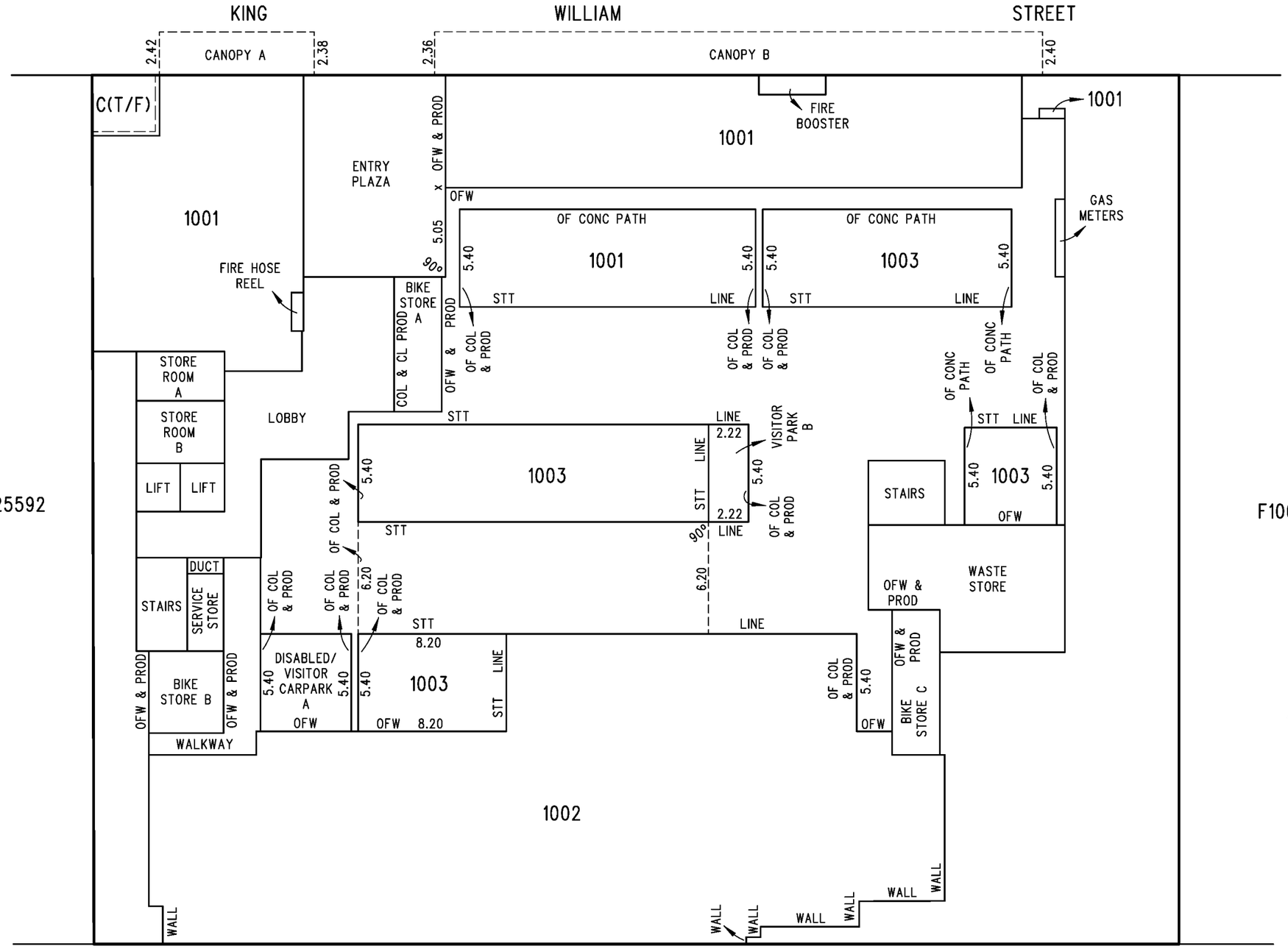

F125592

F100071

LEVEL ONE - GROUND FLOOR

0 2.5 5 7.5 10 12.5

SCALE - METRES

JOHN C BESTED & ASSOC PTY LTD
ABN 96 004 596 908
SURVEYING & PLANNING CONSULTANTS
362 MAGILL ROAD KENSINGTON PARK 5068
PHONE (08) 8332 7111 FAX (08) 8364 1829
email surveyors@johnbested.com.au

REF	DRAWING	VERSION
17160.3	17160.3-COM	7

C41143

SHEET 5 OF 9

58767_pland_4_V02_Version_4

OF.....OUTSIDE FACE
COL.....COLUMN
PROD.....PRODUCTION
OFW.....OUTSIDE FACE WALL
STT.....STRAIGHT
CL.....CENTRELINE

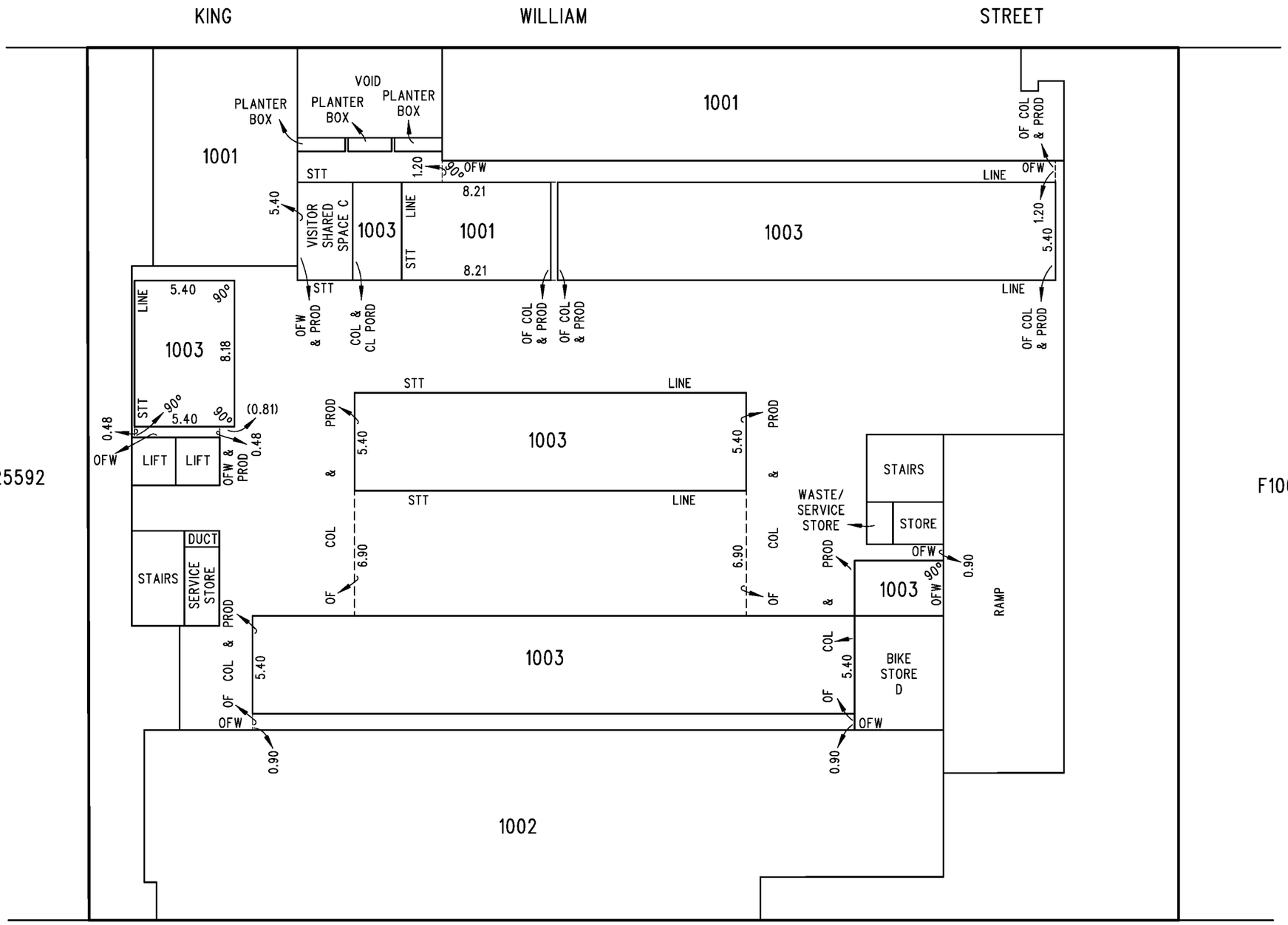

LEVEL TWO - FIRST FLOOR

0 2.5 5 7.5 10 12.5

SCALE - METRES

JOHN C BESTED & ASSOC PTY LTD
ABN 96 004 596 908
SURVEYING & PLANNING CONSULTANTS
362 MAGILL ROAD KENSINGTON PARK 5068
PHONE (08) 8332 7111 FAX (08) 8364 1829
email surveyors@johnbested.com.au

REF	DRAWING	VERSION
17160.3	17160.3-COM	7

C41143

SHEET 6 OF 9

58767_pland_5_V02_Version_4

KING WILLIAM STREET

FEATURE PANEL A

0.03

0.01

1001

F125592

LIFT

LIFT

WATER METER STORE

1003

STAIRS

WASTE/ SERVICE STORE

F100071

DUCT

STAIRS

SERVICE STORE

LITTLE RUNDLE STREET

LEVEL THREE - SECOND FLOOR

0 2.5 5 7.5 10 12.5

SCALE - METRES

JOHN C BESTED & ASSOC PTY LTD

ABN 96 004 596 908

SURVEYING & PLANNING CONSULTANTS

362 MAGILL ROAD KENSINGTON PARK 5068

PHONE (08) 8332 7111 FAX (08) 8364 1829

email surveyors@johnbested.com.au

REF	DRAWING	VERSION
17160.3	17160.3-COM	7

C41143

SHEET 7 OF 9

58767_pland_6_V02_Version_4

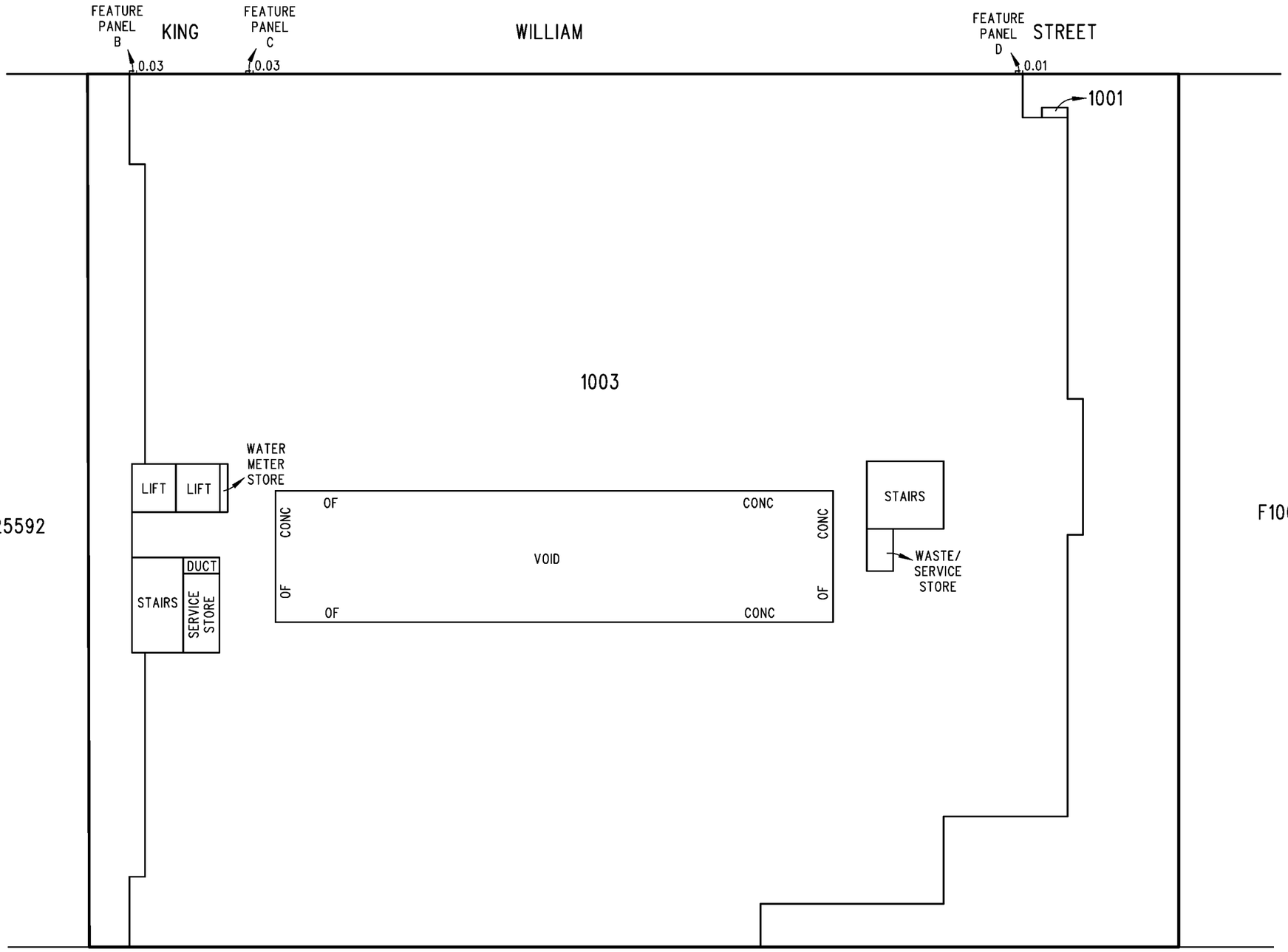

LEVEL FOUR - THIRD FLOOR

0 2.5 5 7.5 10 12.5

SCALE - METRES

JOHN C BESTED & ASSOC PTY LTD

ABN 96 004 596 908

SURVEYING & PLANNING CONSULTANTS

362 MAGILL ROAD KENSINGTON PARK 5068

PHONE (08) 8332 7111 FAX (08) 8364 1829

email surveyors@johnbested.com.au

REF	DRAWING	VERSION
17160.3	17160.3-COM	7

C41143

SHEET 8 OF 9

58767_pland_7_V02_Version_4

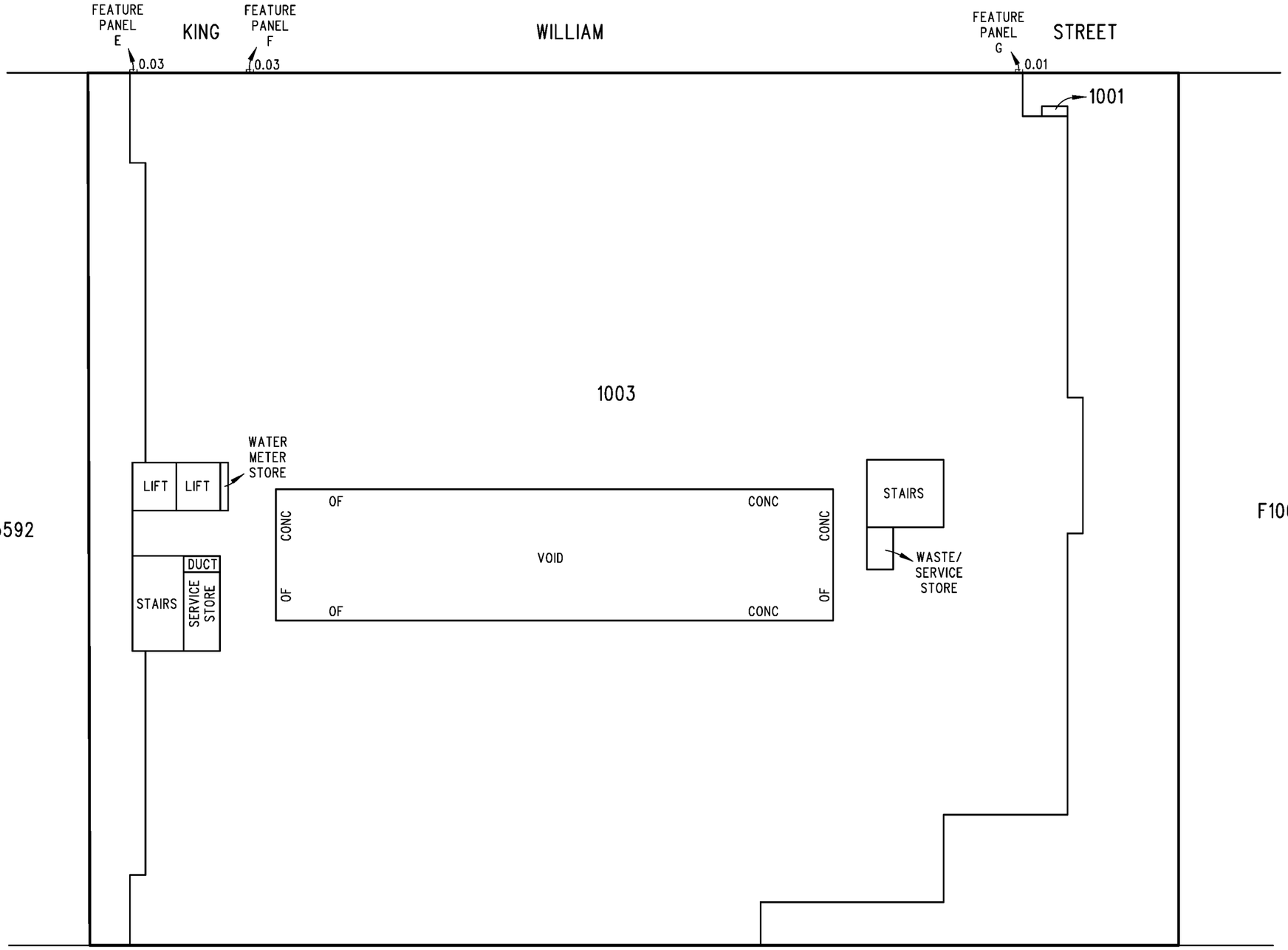

LEVEL FIVE - FOURTH FLOOR

0 2.5 5 7.5 10 12.5

SCALE - METRES

JOHN C BESTED & ASSOC PTY LTD

ABN 96 004 596 908

SURVEYING & PLANNING CONSULTANTS

362 MAGILL ROAD KENSINGTON PARK 5068

PHONE (08) 8332 7111 FAX (08) 8364 1829

email surveyors@johnbested.com.au

REF	DRAWING	VERSION
17160.3	17160.3-COM	7

C41143

SHEET 9 OF 9

58767_pland_8_V02_Version_4

KING WILLIAM STREET

FEATURE PANEL H

0.03

0.01

1001

VOID

VOID

VOID

ROOF

VOID

F125592

F100071

LITTLE RUNDLE STREET

ROOF PLAN

0 2.5 5 7.5 10 12.5

SCALE - METRES

JOHN C BESTED & ASSOC PTY LTD

ABN 96 004 596 908

SURVEYING & PLANNING CONSULTANTS

362 MAGILL ROAD KENSINGTON PARK 5068

PHONE (08) 8332 7111 FAX (08) 8364 1829

email surveyors@johnbested.com.au

REF	DRAWING	VERSION
17160.3	17160.3-COM	7

LOT ENTITLEMENT SHEET

SCHEDULE OF LOT ENTITLEMENTS		
LOT	**LOT ENTITLEMENT**	**SUBDIVIDED**
1001	1,075	
1002	1,140	
1003	7,785	
AGGREGATE	**10,000**	

COMMUNITY PLAN NUMBER

C41143

SHEET 1 OF 1

ACCEPTED

Mark McNeil 13/11/2017

PRO REGISTRAR-GENERAL

DEV. No. 155/C025/17

CERTIFICATE OF LAND VALUER

I ***Zac Vartuli***

being a land valuer within the meaning of the Land Valuers Act 1996 certify that the schedule is correct for the purposes of the Community Titles Act 1996

Dated the 27th day of September 2017

Signature of Land Valuer

Community Corporation No. 41143 Inc.
La Verde (Primary)
56-60 King William Street, KENT TOWN SA 5067

The following is a summary of policy decisions, resolutions, and bylaws as resolved by the corporation, by General Meeting or by the Committee of Management. This summary is merely a guide and should be treated as such, the relevant minutes should be consulted for precise wording. MUNRO™ will not be held accountable for any and all inaccuracies and/or errors prior to its management.

AGM 1/03/2023

Cleaning of Common Property - (Caretaking, Cleaning, Gardening: Including the residential common areas)

It was resolved that the Corporation continues with the arrangement of the Corporation caretaker undertaking this service of the periodic cleaning of all common areas of the Corporation.

It was noted that the Management Committee would continue to monitor the cleaning duties.

It was agreed unanimously, as adopted from the 2021 AGM concerns regarding allocation of service fees based on the location of all common areas, that Corporation 41146 is responsible for 40% of these services and funding accordingly.

Gardening & Grounds Maintenance

(Including the residential common areas - level 3 garden)

It was resolved that the Corporation continues with the services of the Corporation Caretaker for the garden maintenance at the property.

It was agreed unanimously, as adopted from the 2021 AGM concerns regarding allocation of service fees for level 3 garden common areas, that Corporation 41146 is responsible for 60% of these services and funding accordingly.

Lift Maintenance

It was resolved that the Corporation continues with Schindler Lifts for the periodic maintenance of the lifts at the Corporation noting there is a five-year agreement in place.

It was noted that lift services are not applicable to Lot Owners of Lots one, two & three of Community Corporation 41144 Inc, and Community Corporation 41145 Inc. and therefore are excluded for requirements to fund lift maintenance.

Grease Pit / Pump & Sump Cleaning

It was noted at the 2022 Annual General Meeting that as costs associated with on-going maintenance and cleaning of the grease pit are the responsibility of Lot Owners of Lots one and two of Community Corporation 41144 Inc. and that arrangements for these services will be moved and managed by Corporation 41144 Inc.

Maintenance Policy

The Corporation adopt the following maintenance procedures to assist in expediting repairs;

a) The Corporation authorise general repairs to proceed where costs are less than $500 to $600 or; repairs are of an emergency and/or essential nature, and for an Office Bearer to be informed of any required actions.
b) Unless alternate instructions are resolved at a general meeting of the Corporation;
    a. The Corporation's preference is for 2 quotes for general repairs of $500.00 to $2,000.00, noting Office Bearers are authorised to engage a contractor when the first quote is presented.
    b. The Corporation's preference is for 3 quotes for any general repairs exceeding $2,000.00
c) All quotes are to be made available to Office Bearers at the earliest opportunity for a decision, and where a General Meeting has approved for maintenance works to proceed;
    a. The Manager is authorised to select the most suitable quote & arrange repairs, should instructions have not been received from an Office Bearer within a determined period of the General Meeting, or 30 days of quotes presented.

Shade Blinds

It was discussed that the approved colour is a plain charcoal. The Management Committee must approve of the colour in writing before any blinds are installed. The colour/shade if available in brochure form can be emailed to the Body Corporate Manager who can then submit to the Office Bearers for final approval.

Electric Vehicle Charging Stations

The process to install charging station was discussed. Franc Falco has previously installed a charger and remarked that the wiring needs to be installed to the meter of the apartment so that owners are billed individually. The charger is to be installed within the apartment allocated carpark. The Electrician who wired the

building is the preferred contractor. Approval is to be sought from the Committee in the first instance. The Committee are looking to write up a procedure to help owners with installing an electric vehicle charging station as more people convert from petrol to electric.

MCM 16/05/2019

Pet approvals – SOHO 25

An application was received for a pet for SOHO 25. The Committee approved this application.

AGM 28/02/2019

Lock Box Apartment three CC 41146 – Kidney Health Australia

Motion tabled; Kidney Health Australia are approved to install a lock box adjacent the entrance of the apartment building (next to existing lock boxes). (Please see attachment)
Motion Carried

All approved work must comply with any Local Government requirements, use quality materials and be installed in a professional manner. All future maintenance costs and any damage or injury which may occur as a result of the approved installation or addition is the responsibility of the relevant unit owner.

FSGM 21/02/2018

By-Law 13.3 – Appearance of building

To consider and adopt a proposal by the Developer that;
The Office Bearers and Committee are empowered to determine/nominate suitable specifications of window treatments, and balcony items to ensure a neutral shade of off white/ivory to maintain uniform visual amenity to the streetscape of the building.
Motion Carried

Motion on a more pet friendly policy

To resolve that; Community Corporation 41143 Inc. and secondary Corporations 41145 Inc and 41146 Inc, approve on a case-by-case basis for any Lot to have one small to medium size dog or a cat, subject to application to, and approval by the management committee, with the proviso that the management committee reserves the right to withdraw approval for any continuously noisy, aggressive or poorly behaved pet on the property.

Subject to Management Committee approval being given;

- Only non-aggressive dog breeds will be considered.
- Dogs must be kept on a leash when on common property, or secured within the unit.
- The Corporation has requested that all pets be carried when on Common Property.
- Cleaning or repairs of the Lot and common areas from soiling or damage by the pet is the responsibility of the pet's owner.
- Any continuous complaints regarding noise, aggressive and antisocial behaviour by the pet or neglect by the owner/s may result in Management Committee approval being rescinded and the owner/s being required to remove the animal from the property.
- This does not apply to persons requiring a guide/assistance animal.

Motion Carried

FORM EF1 Orig. 1) **LF 12823783**

16:51 07-Nov-2017
14 of 14

LANDS TITLES REGISTRATION OFFICE

SOUTH AUSTRALIA

LODGEMENT FOR FILING UNDER THE COMMUNITY TITLES ACT 1996

FORM APPROVED BY THE REGISTRAR-GENERAL

BELOW THIS LINE FOR OFFICE PURPOSES ONLY

SERIES NO	PREFIX
143	LF

AGENT CODE

LODGED BY: : **LYNCH MEYER** **MSLM**

CORRECTION TO: **MSLM**

SUPPORTING DOCUMENTATION LODGED WITH INSTRUMENT (COPIES ONLY)

1

2

3

4

5

PICK-UP NO.	
CP	

CORRECTION	PASSED

FILED 13/11/17

REGISTRAR-GENERAL

PRIVACY COLLECTION STATEMENT: The information in this form is collected under statutory authority and is used for maintaining publicly searchable registers and indexes. It may also be used for authorised purposes in accordance with Government legislation and policy requirements.

© LAWSOFT PTY LTD (June 2016) Ref: 1710322

605484

COMMUNITY PLAN NO. C41146

COMMERCIAL AND RESIDENTIAL DEVELOPMENT

"VERDE"
COMMERCIAL AND RESIDENTIAL DEVELOPMENT
54-60 KING WILLIAM STREET, KENT TOWN

SECONDARY STRATA BY LAWS – RESIDENTIAL

Index

No		Page
1.	Interpretation and Definitions	4
2.	Administration Management and Control of Common Property	5
3.	Use and Enjoyment of the Common Property	6
4.	Use of Lots/Persons bound by these By-laws	7
5.	Variation of By-laws	7
6.	Development of Community Lots	7
7.	Noise	8
8.	Vehicles	8
9.	Obstruction	8
10.	Damage to Common Property	8
11.	Behaviour of Invitees	8
12.	Depositing Rubbish etc on Common Property	9
13.	Appearance of building	9
14.	Storage of Flammable Liquids etc	10
15.	Garbage disposal	11
16.	Keeping of animals	11
17.	Tenants to have notice of by-laws	12
18.	Observance of by-laws	12
19.	Lot to be kept clean	12
20.	Use of water etc	12
21.	Notice to be given	13
22.	Corporation may inspect	13
23.	Infectious diseases	13
24.	Unavoidable noise to be minimised	13
25.	Moving Articles	14

26. Committee may make rules 14

27. Lotholders not to instruct contractors/workmen 14

28. Use of lots - specific 14

29. Common Property - Special Privileges 15

30. Security 15

31. Corporation rights and powers - unpaid levies 16

32. Insurance 17

33. Severability 18

34. Offence 18

35. Penalty 18

36. Naming Rights and Signage Rights 18

37. Telecommunications Licence 19

38. Permits 19

39. Compensation to Corporation 20

40. No Trade or Business from Residential Lots 20

41. Building Warranties 20

42. Air Conditioning Equipment 21

43. Contributions by Owners 21

44. Retail/Commercial Lots 22

45. Caretakers Arrangements 22

Certified correctly by prepared in accordance with the requirements of the *Community Titles Act 1996* by the person who prepared the document

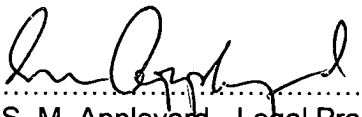

.....

S. M. Appleyard - Legal Practitioner
190 Flinders Street
Adelaide SA 5000

COMMUNITY TITLES ACT

Secondary Scheme By-Laws
Community Plan No. C41146

Part 1 - Preliminary

1. In these by-laws, unless the contrary intention appears:-

"*the Act*" - means the *Community Titles Act 1996*;

"*the Corporation*" means the Community Corporation No. C41146 Incorporated;

"*Corporation Manager*" means any party approved by the Corporation having the relevant expertise and experience to properly manage and perform the duties and functions of the corporation under the Act and Corporation Management Agreement means any such Agreement appointing the Corporation Manager pursuant to the Act;

"*develop*" includes:

(i) the construction or alteration of any building, structure, fence, wall or other external fixture or fitting;

(ii) any site works or landscaping;

(iii) any change to any improvement on the community lot;

and "*development*" has a corresponding meaning;

"*landscaping*" includes the provision and arrangement of trees, shrubs, ground covers, grassed areas, paving and similar site works;

"*improvement*" means any thing which has been done to the community lot by the development of the community lot;

"*motor vehicle*" includes motor cycle, caravan, boat and bicycle;

"*party wall*" includes the easement for support and shelter created under the Act;

"*visitors*" includes customers, invitees and clients of the owner or occupier of a community lot;

"*lot*" means a Community Lot comprised in Community Corporation Plan Number C41146, and includes a Strata Lot.

"*Lotholder*" means the owner of a lot and where the context allows the occupier of a lot.

"*Occupier*" of a lot includes, if the lot is unoccupied, the owner of the lot;

"*rules*" means the rules made by the Corporation pursuant to the powers contained in these by-laws;

a term defined in the Act has the same meaning when used in these by-laws unless the contrary intention appears.

a reference to any statute, regulation or Council by-law includes all amendments, consolidations or replacements of them;

one gender includes all the other genders;

the singular includes the plural and the other way around.

Part 2 - Mandatory By-laws

2. **Administration Management and Control of Common Property**

2.1. The Corporation is responsible for the tasks set out in the Act as the functions of the Corporation, and any additional functions given to it under these by-laws.

2.2. The Corporation is (in addition to its responsibilities under the Act) responsible for:

2.2.1. the repair, maintenance and planting of the landscaped areas of the Common Property;

2.2.2. the repair and maintenance of the driveway and car parking areas of the Common Property;

2.2.3. the repair, maintenance and replacement of any security lighting on the Common Property;

2.2.4. the repair, maintenance and replacement of any bitumen or paving bricks on the Common Property;

2.3. Any costs incurred by the corporation in fulfilling its functions under either or both the Act and these by-laws are recoverable from the owners of the Lots in proportion to the lot entitlement of each community lot.

2.4. In the administration, management and control of the Common Property, the corporation must ensure that these by-laws are adhered to by the persons that are bound by the by-laws. The Corporation has an obligation to enforce the by-laws for the benefit of the owners and occupiers of the Lots and for the benefit of the Corporation.

2.5. The Corporation may (but is not obliged to) establish a Management Committee ("the Committee") responsible to the Corporation for the administration, management and control of the Common Property.

2.6. The Corporation may appoint a manager to carry out, on behalf of the Corporation the function of administering, managing and controlling the Common Property.

2.7. The manager shall be appointed on a contract that is subject to annual review by the Corporation.

2.8. If on annual review the Corporation is dissatisfied with the Manager's performance the Corporation may determine the Management Contract.

3. Use and Enjoyment of the Common Property

3.1. The Common Property is, subject to the Act and these by-laws for the common use and enjoyment of owners and occupiers in the community scheme and their visitors.

3.2. A person bound by these by-laws:

3.2.1. must not obstruct the lawful use of the Common Property by any person;

3.2.2. must not use the common property in a manner that unreasonably interferes with the use and enjoyment of the Common Property by the other persons bound by these by-laws or their visitors;

3.2.3. must not make, or allow that person's visitors to make, undue noise in or about the Common Property;

3.2.4. must not interfere, or allow that person's visitors to interfere, with other people in the enjoyment of their rights in relation to the Common Property;

3.2.5. must not park a motor vehicle in a parking space allocated for others on the Common Property, or alternatively, on a part of the Common Property on which parking is not authorised by the Corporation;

3.2.6. must take reasonable steps to ensure that their visitors do not park a motor vehicle in parking spaces allocated for others on the Common Property or on parts of the Common Property on which parking is not authorised by the Corporation;

3.2.7. must not repair motor vehicles on the Common Property;

3.2.8. must not drive a motor vehicle at a speed of greater than 10 km/hour on the Common Property;

3.2.9. must not damage or interfere with any landscaping on the Common Property;

3.2.10. must not use any portion of the Common Property for that person's garden;

3.2.11. must not display any sign, or any other conspicuous material of a similar nature on any part of the Common Property;

3.2.12. must not leave or store any items on the common property.

3.3. The Corporation may by ordinary resolution (unless the Act requires otherwise) approve the use of the Common Property in a manner inconsistent with these by-laws.

4. Use of Lots/Persons bound by these By-laws

4.1. Subject to the Act any other relevant legislation and these by-laws a person bound by these by-laws must not use a lot for a purpose unless the use is consistent with the Scheme Description, the By-laws and the use has been otherwise approved by the Corporation.

4.2. The following persons are bound by these By-laws:-

4.2.1. the Corporation;

4.2.2. the Lotholders and occupiers of the Community Lots comprising the Community Scheme;

4.2.3. persons entering the Community Parcel.

5. Variation of By-laws

5.1. These by-laws come into operation when the plan of community division is deposited in the Land Titles Registration Office.

5.2. These by-laws continue until varied or cancelled as provided for in the Act.

Part 3 - General Provisions

6. Development of Community Lots

6.1. The following by-laws regulate any future development on the community lots, and the word "*developer*" means any person who conducts any development on the community lot.

6.2. The developer must not develop a community lot unless the development complies with the requirements of these by-laws.

6.3. Any further development of any community lot which involves the alteration or destruction of a party wall requires the prior written consent of any person with registered party wall rights.

6.4. The developer must only develop the community lot for a purpose allowed under the relevant development plan under the *Development Act 1993*.

6.5. The Corporation may by prior special resolution approve any development which would otherwise be in breach of these by-laws.

6.6. The scheme description lodged with these by-laws contemplates a secondary division of Primary Lot 1003 to create forty seven (47) Secondary residential premises and common property.

6.7. The Corporation will do all acts, matters and things and grant such approvals as may be required, to give effect to the intent of the scheme description and this by-law is authority for the Corporation to do so.

6.8. Primary Lot 1003 as divided by secondary division may be used only for residential purposes.

7. **Noise**

A person bound by these by-laws shall not create any noise on the Community parcel likely to interfere with the peaceful enjoyment of a Lot holder or occupier of another lot or of any person lawfully using Common Property.

8. **Vehicles**

In addition to any other power, authority, duty or function imposed or conferred on the Corporation, it shall have the power to tow away any motor vehicle parked or standing in contravention of these by-laws at the expense of the person whose act or default has caused the contravention and that person shall indemnify the Corporation for all costs and damages arising out of such actions.

9. **Obstruction**

A person bound by these by-laws must not obstruct lawful use of Common Property by any person.

10. **Damage to Common Property**

A person bound by these by-laws must not mark, paint drive nails or screws or the like into, or otherwise damage or deface, any structure that forms part of the improvements on the Community Parcel, or Common Property except with the consent of the Corporation.

11. **Behaviour of Invitees**

11.1. A person bound by these by-laws shall take all reasonable steps to ensure that his invitees do not behave in a manner likely to interfere with the peaceful enjoyment of another Lotholder or occupier or of any person lawfully using Common Property.

11.2. A person bound by these by-laws shall be liable to compensate the Corporation in respect of all damage to the Common Property or personal property vested in it caused by such person.

11.3. The owner of a lot which is the subject of a lease or licence agreement shall take all reasonable steps, including any action available to that owner under any such lease or licence agreement, to ensure that any lessee or licensee or other occupier of the lot or their invitees comply with the provisions of the by-laws.

11.4. The duties and obligations imposed by these by-laws on a Lotholder or occupier of a lot must be observed not only by the Lotholder or occupier and also by their guests, servants, employees, agents, children, invitees and licensees of such Lotholder or occupier.

12. Depositing Rubbish etc on Common Property

12.1. A person bound by these by-laws must not deposit or throw upon the Common Property any rubbish, dirt, dust or other material likely to interfere with the peaceful enjoyment of the Lotholder or occupier of another lot or of any person lawfully using the Common Property.

12.2. A person bound by these by-laws must not throw or allow to fall or permit or suffer to be thrown or to fall any paper, rubbish, refuse, cigarette butts or other substance whatsoever out of the windows or doors or down staircases, from balconies, from the roof or in the passageways of any building on the Community Parcel. Any damage or costs for cleaning or repair caused by breach hereof shall be borne by the Lotholder or occupier.

12.3. A person bound by these by-laws must segregate and place all rubbish in the Recycled or General:

12.3.1. waste bins (provided by the Corporation) at Level 1; or

12.3.2. in the waste bins via the Recycled or General chutes provided for Levels 2-5.

13. Appearance of building

13.1. A person bound by these by-laws must not, except with the consent in writing of the Corporation:

13.1.1. hang any washing, towel, bedding, clothing or other article or display any sign, advertisement, placard, banner, pamphlet or like matter on any part of his lot in such a way as to be visible from outside any building on a lot;

13.1.2. place other than outdoor settings, chairs, barbeque (no charcoal or bottled gas) and plants on any balcony or verandah of a lot.

13.2. A Lotholder or occupier must not:-

13.2.1. erect or affix any curtains, blinds, or awnings to the inside or outside of his lot or the building;

13.2.2. affix any fittings to exterior walls or ceilings of his lot or the building;

without the prior written consent of the Corporation and must comply with the directions and requirements of the Corporation, including without limitation, style and colour of window treatments.

Blinds, awnings and curtain backing to outside windows visible from the streetscape must be in a neutral shade of off white/ivory to maintain uniform visual amenity to the streetscape.

13.3. For avoidance of doubt the Developer proposes to procure, at the first meeting of the Corporation, a resolution affirming the Developer's nominated specification of window treatments (outside colour), balcony barbecues,

balcony tables, balcony chairs, pots and pot plants which Lotholders or occupiers are entitled to install or place on or in a Lot or subsidiary, to maintain uniform visual amenity from the streetscape. Outside wireless, two-way radio and television aerials or satellite receivers must not be erected without the prior written permission of the Corporation.

13.4. No structural alteration shall be made to any lot (including any alterations to gas, water supply, plumbing or electrical installations and including the installation of any air conditioning system) without the prior written permission of the Corporation.

13.5. A Lotholder or occupier must not paint or affix any advertisements, placards, banners, pamphlets, notices or posters to or on any part of the exterior of his lot nor do anything to vary the external appearance of his lot or the building without the prior written consent of the Corporation **PROVIDED ALWAYS** that whilst the owner of a lot at plan deposit (developer) remains owner of more than one lot it or its respective servants and/or agents may without the consent of the Corporation paint or affix any signs advertisements notice or notices or posters to or on any part of the premises for the purposes of offering for sale or lease any lot.

13.6. This clause 13 does not preclude the Lotholder or occupier from displaying signs or signage used in the normal course of its business, subject to:

13.6.1. conformity with the Developers themes (size, colour);

13.6.2. obtaining all necessary approvals from a relevant development authority; and

13.6.3. any requirements of the primary By Laws.

13.7. The Corporation shall at regular intervals paint and maintain the exterior facade of any building in colours and to a standard commensurate with the development and keep the Common Property in a state of good and serviceable repair and properly maintain all chattels, fixtures and fittings (including walkways, stairways, lifts, handrails, intercoms and security equipment (if any)) held by the Corporation or used in connection with the Common Property or its enjoyment by Lotholders or occupiers and visitors and for this purpose enter into an appropriate contract or contracts with third parties for such parties to provide those services for the benefit of Lotholders on behalf of the Corporation.

14. Storage of Flammable Liquids etc.

14.1. A Lotholder must not, except with the consent in writing of the Corporation, use or store on a lot or on the Common Property any flammable chemical, liquid or gas or other flammable material, other than chemicals, liquids, gases or other material used or intended to be used for domestic purposes, or any such chemical, liquid, gas or other material in a fuel tank of a motor vehicle or internal combustion engine or domestic cleaning chemicals.

14.2. A Lotholder or occupier must not bring to, do or keep anything in his lot which will increase the rate of fire insurance on any building or any property on a lot

or which may conflict with the laws and/or regulations relating to fires or any insurance policy upon the building or any property on the Community Parcel or the regulations or ordinances of any public authority for the time being in force.

14.3. If a Lotholder or occupier does or permits to be done any act matter or thing which has the effect of invalidating or avoiding any policy of insurance taken out by the Corporation then such Proprietor or Occupier shall be responsible for any damage or loss which the Corporation or any other Lotholder may suffer or incur as a result thereof.

14.4. If the Corporation consents to a Lotholder or occupier bringing to doing or keeping anything in his lot which increases the rate of fire insurance on any building or on any property on a lot, such Lotholder or occupier must pay the amount of any increased premium to the Corporation upon demand.

15. Garbage disposal

15.1. A Lotholder or occupier of a lot must:-

15.1.1. save where the Corporation provides some other means of disposal of garbage, (which other means of disposal will be adhered to by the Lotholder or occupier) maintain within his lot, or on such part of the Common Property as may be authorised by the Corporation, in clean and dry condition and adequately covered, a receptacle(s) for garbage;

15.1.2. comply with all local authority by-laws and ordinances relating to the disposal of garbage;

15.1.3. ensure that the health, hygiene and comfort of the Lotholder or occupier of any other lot is not adversely affected by his disposal of garbage.

15.2. Garbage receptacles shall be placed only where approved by the Corporation and used only for the purpose for which they are provided:

15.2.1. Empty bottles, boxes, used containers and similar items shall be placed in Recycled and General waste chutes, and/or Recycled and General waste bins provided by the Corporation;

15.2.2. The car parking areas shall be kept tidy and free of all litter.

16. Keeping of animals

16.1. A person bound by these by-laws must not keep an animal (without the prior written consent of the Community Corporation), in or in the vicinity of a lot but this by-law 16 does not:-

16.1.1. prevent an occupier of or visitor to a lot who suffers from a disability from keeping a "relevant animal" (as defined in the Act) in or in the vicinity of a lot or common property, if trained to assist the occupier in respect of that disability;

16.2. Where a person bound by these by-laws (with the consent of the Corporation or pursuant to clause 16.1.1) brings or keeps an animal on a lot or any other part of the common property that person is:-

16.2.1. liable to the proprietors or occupiers of all other lots comprised in the Plan of Community Division, and all other persons lawfully on the common property for any act or noise which is disturbing to an extent which is unreasonable, and for damage to, or loss of property or injury to any person caused by the animal; and

16.2.2. responsible for cleaning up after the animal has fouled any part of another lot or any part of the common property.

17. **Tenants to have notice of by-laws**

A copy of these By-laws (or a precis thereof approved by the Committee) shall be delivered to the Lessee or occupier of any lot not personally occupied by the Lotholder and in any event incorporated as an annexure to any Lease or Licence granted to a Lessee or occupier.

18. **Observance of by-laws**

The duties and obligations imposed by these By-laws on a Lotholder must be observed by the Lot holder and the Lot holder's occupiers, tenants, guests, servants, employees, agents, children, invitees and licensees.

19. **Lot to be kept clean**

Each Lotholder or occupier shall:-

19.1. keep his lot clean and take all practicable steps to prevent infestation by vermin and/or insects;

19.2. keep his windows in a thorough state of cleanliness and promptly notify the Corporation for their replacement with new glass of the same kind and weight as at present if broken or cracked;

19.3. not install or provide any window tinting to any external window of his lot;

19.4. be responsible for the interior cleanliness, maintenance and decoration of his lot, including balcony and courtyard glass and balcony balustrade rails even though that may be classified as common property;

19.5. take every reasonable precaution to prevent water overflowing on any other Lot, Subsidiary or common property when cleaning a balcony area or watering plants on a balcony.

20. **Use of water etc**

20.1. A Lotholder or occupier must not waste the water and shall see that all water taps in his lot are promptly turned off after use.

20.2. The water closets, conveniences and other water apparatus including waste pipes and drains must not be used for any purposes other than those for which they were constructed and no sweepings or rubbish or other unsuitable substance shall be deposited therein. Any damage or blockage resulting to such water closets, conveniences, water apparatus, waste pipes and drains from misuse or negligence shall be borne by the Lotholder whether the same is caused by his own actions, or those of his tenants, servants, agents, guest, employees, invitees, or licensees.

20.3. The Corporation may advise SA Water that all water charges will be billed directly to the Lotholder by SA Water in accordance with Lot entitlements.

21. **Notice to be given**

A Lotholder or occupier must give the Corporation prompt notice of any accident to or defect in the water pipes, gas pipes, electric installations or fixtures which comes to his knowledge and the Corporation shall have authority by its agents or servants in the circumstances having regard to the urgency involved to examine or make such repairs or renovations as they may deem necessary for the safety and preservation of the said building as often as may be necessary.

22. **Corporation may inspect**

22.1. Subject to giving reasonable written notice (without notice in the case of emergency) the Corporation and its servants, agents and contractors shall be permitted to inspect the interior of any lot and to test any electrical, gas or water installation or equipment therein and to trace and repair any leakage or defect in the said installation or equipment (at the expense of the Lotholder in cases where such leakage or defect is due to any act or default of the said Lotholder or his tenants, guests, servants, agents, employees, invitees or licensees). If not so permitted they may effect an entry. The Corporation, in exercising this power, shall ensure that its servants, agents and employees cause as little inconvenience to the Lotholder or occupier as is reasonable in the circumstances.

22.2. All doors and windows to the premises shall be securely fastened on all occasions when any premises are left unoccupied and the Corporation reserves the right to enter and fasten the same if left insecurely fastened.

23. **Infectious diseases**

In the event of any infectious disease which may require notification by virtue of any Statute, Regulation or Ordinances affecting any person in any lot the Lotholder or occupier of such lot must give or cause to be given written notice thereof and any other information which may be required relative thereto to the Corporation and shall pay to the Corporation the expenses of disinfecting the lot and building and replacing any articles or things the destruction of which may be rendered necessary by such disease.

24. **Unavoidable noise to be minimised**

In the event of any unavoidable noise in a lot at any time the Lotholder or occupier thereof must take all practical means to minimise annoyance to other occupants by

closing all doors, windows and curtains of his lot and also such further steps as may be within his power for the same purpose.

25. **Moving Articles**

The Lot Holder or Occupier must comply with and observe the following conditions and restrictions for delivery or movement of goods or furniture to and from a Lot:

25.1. goods or furniture may be delivered by appointment with the caretaker and to and from the Lot only through such entrances (Southern side via Little Rundle Street and using Service Lane on Western side – "3 tonne" truck limit) at such times and in such manner as will ensure minimum interference with persons using the entrances or Common Property and will be subject to the prior approval of and under the supervision of the Corporation;

25.2. goods or furniture being moved to or from a Lot shall only be carried in the lift installed in the Building (if any) designated for the purpose of carrying goods or furniture (the "**Goods Lift**") but in carrying the goods or furniture in the Goods Lift priority shall at all times be given to passenger traffic;

25.3. before goods or furniture are carried in the Goods Lift the sides of the Goods Lift shall be covered in such manner as the Corporation directs to prevent scratching or damage;

25.4. goods or furniture must not be left on the Common Property at any time and if so left may be removed by the Corporation at the expense and risk of the Lot Holder; and

25.5. appropriate measures must be taken to ensure that the security of the Building is maintained at all times while goods or furniture are being delivered to or removed from the Building.

26. **Committee may make rules**

Subject to the Act, the Corporation or its appointed manager may make rules relating to the Common Property not inconsistent with these by-laws and the same shall be observed by the Lotholders and their tenants, servants, agents, guests, employees, invitees or licensees unless and until they are disallowed or revoked by a majority resolution at a general meeting of the Lotholders.

27. **Lotholders not to instruct contractors/workmen**

Lotholders must not directly instruct any contractors or workmen employed by the Corporation unless so authorised, and all requests for consideration of any particular matter to be referred to the Corporation shall be directed to the Secretary or Corporation Manager and not to the Presiding Officer or any member of the Corporation.

28. **Use of lots - specific**

Subject to the provisions of these by-laws, the Scheme Description and the Development Plan for the Corporation of the City of Norwood, Payneham and St Peters and any other relevant Statutory enactments:

28.1. Retail and Commercial Lots are presently intended to be configured respectively as six (6) commercial/retail lots, with intended uses including but not limited to offices, professional rooms, licensed restaurants, bistros/coffee shops, gift shops, staff facilities, staff room, foyer, storage (including garbage storage), waiting and reception purposes, management, the letting of lots in the Building, the rendering of services to occupants of lots and other commercial and retail business purposes approved by a relevant development authority.

28.2. Other than uses specified in Clauses 28.1 a Lotholder or occupier is prohibited from leasing or granting rights of occupation in respect of a Lot for valuable consideration for a period of less than two (2) months.

28.3. Secondary SOHO lots, as discrete from and with separate access from adjoining street frontage are at their election entitled to use a Lot for such as "Air BNB", subject to any relevant development authority approval if required.

This clause 28 does not preclude a Lotholder entering into a Lease, Licence or Management Agreement on normal commercial terms for use of that lot in accordance with a use authorized by a relevant development authority.

29. **Common property - Special privileges (See Clauses 37 and 38)**

29.1. With the written consent of the original proprietor which is hereby acknowledged the Corporation may confer special privileges in respect of the common property to use the same in connection with such business operations lawfully carried out in accordance with relevant development authority approval in respect of the primary lots (whether divided by secondary division or not) and without limiting the generality of the foregoing the uses contemplated in clause 28, but the Corporation shall continue to be responsible for carrying out its duties pursuant to the Act in respect of the common property generally.

29.2. This clause 29 may not be changed except by unanimous resolution.

30. **Security**

30.1. The corporation may take all reasonable steps to ensure the security of the Community Parcel and property of the Corporation and the observance of these by-laws and without limiting the generality of the foregoing, may:-

30.1.1. close off any part of the Common Property not required for ingress or egress to a lot or a parking space on either a temporary or permanent basis or otherwise restrict the access to or use by Lotholders or occupiers of any such part of the Common Property;

30.1.2. permit any designated part of the Common Property to be used by any security person, firm or company to the exclusion of Lotholders or occupiers generally as a means of monitoring the security and general safety of the Community Parcel; and

30.1.3. obtain, install and maintain any locks, alarms, communication system or any other security device.

30.2. If the Corporation in the exercise of any of its powers under these by-laws restricts the access of Lotholders or occupiers to any part of the Common Property by means of any lock or similar security device it may make such number of keys or operating systems (if any) as it determines available to Lotholders free of charge and thereafter may at its discretion make additional numbers thereof available to Lotholders upon payment of a reasonable charge as may be determined from time to time by the Corporation.

30.3. The Lotholder of a Lot to whom any key or any operating system is given pursuant to these by-laws shall exercise a high degree of caution and responsibility in making the same available for use by any occupier of a lot and shall take reasonable precautions (which shall include an appropriate covenant in any lease or licence of a lot to any such occupier) to ensure the return thereof to the Lotholder or the corporation upon the occupier ceasing to be an occupier.

30.4. A Lotholder or occupier of a lot into whose possession any key or operating system referred to in these by-laws has come shall not without the prior written approval of the Corporation duplicate the same or cause or permit the same to be duplicated and shall take all reasonable precautions to ensure that the same is not lost or handed to any person other than another Lotholder or occupier and is not disposed of otherwise than by returning it to the Corporation.

30.5. A Lotholder or occupier of a lot who is issued with a key or operating system referred to in these by-laws shall immediately notify the Corporation if the same is lost or misplaced.

31. **Corporations rights and powers - unpaid levies**

31.1. A Lotholder (which expression shall extend to a corporation and a mortgagee in possession) must pay on demand:-

31.1.1. the whole of the Corporation's costs and expenses (including Solicitors and own client costs) incurred in recovering levies or moneys duly levied upon that Lotholder's Lot in the Plan by the Corporation pursuant to the Act or pursuant to the by-laws of the Corporation;

31.1.2. such costs as may have been ordered to be paid by the Lotholder to the Corporation by any Court Tribunal or body with authority to order the payment of costs.

31.2. In the event that the Lotholder fails to attend to the payment of such costs and expenses after demand is made for the payment of same, the Corporation may take action for the recovery of same in any Court of competent jurisdiction with the proviso that, in respect of the Corporation's party and party costs, the Corporation shall comply with any procedure for the taxation and recovery of costs provided for in the rules of the Court, Tribunal or other body which orders payment in costs in favour of the Corporation. The Corporation may also enter any costs payable to it as referred to in paragraphs 31.1 above against the levy account of the Lotholder's Lot in the Plan and note the

amount of such costs on any certificate issued in respect of the Lot pursuant to the *Real Property Act*.

31.3. If a contribution levied under the Act is unpaid 30 days after it falls due for payment, then the amount of the unpaid contribution will bear interest thereafter at an annual rate as determined by the Corporation from time to time, unless otherwise determined by Ordinary Resolution at a general meeting. At the discretion of the Committee, any Corporation Manager has administrative discretion to write off interest at a limit to be determined by the Corporation from time to time.

31.4. If at the time a person becomes the Lotholder of a lot, another person is liable in respect of the lot to pay interest on a contribution, the Lotholder is jointly and severally liable with the other person for the payment of the interest.

31.5. The amount of any interest is recoverable by the Corporation as a liquidated debt.

31.6. Where the Corporation expends money to make good damage caused by a breach of the Act, or of these by-laws by any Lotholder or the tenants, occupiers, guests, servants, employees, agents, children, invitees or licensees of the Proprietor or any of the them the Corporation shall be entitled to recover the amount so expended as debt in an action in any Court of competent jurisdiction from the Proprietor of the lot at the time when the breach occurred.

32. Insurance

The Corporation must affect all insurance required to be effected by a community corporation pursuant to the Act. The costs of arranging Insurance(s) in terms of this By-law are to be recovered from the owners of the Lots proportionate to their Lot entitlements.

32.1. The Community Corporation must review, on an annual basis:-

32.1.1. all insurance effected by it; and

32.1.2. the need for new or additional insurances.

32.2. Notice of an Annual General Meeting must include a form of motion to decide whether insurance(s) effected by the Community Corporation should be confirmed, varied or extended; and

32.3. The Community Corporation must immediately effect new insurances or vary or extend insurances if there is an increase in risk or a new risk to Common Property or the Community Corporation.

32.4. A Lotholder or occupier must not do anything that might:-

32.4.1. void or prejudice insurance effected by the Community Corporation; or

32.4.2. increase any insurance premium payable by the Community Corporation.

32.5. A retail or commercial lotholder shall carry its own third party property and bodily insurance on the retail lot extending to cover any person occupying the lotholder's retail lot.

32.6. The policy of insurance to be carried by the retail lotholder must be issued by a company approved by the Corporation and must give such cover as the Corporation in its absolute discretion may require, the minimum requirements being that such a policy of insurance must give cover for loss or damage to property or person of third parties to a minimum of $20 million in respect of any one accident or event.

32.7. Proof of coverage by way of a copy of the retail or commercial lotholder's current receipt of insurance schedule must be supplied to the Corporation on request.

33. **Severability**

If any by-law or any part of these by-laws cannot be given effect or full force and effect by reason of statutory invalidity or otherwise such by-law or part by-law as the case may be which cannot be given effect or its full force and effect shall be severed, ignored or read down restrictively but so as to maintain and uphold as far as possible the remaining by-laws.

34. **Offence**

Any person who contravenes or fails to comply with the provisions contained in these by-laws or Rules is guilty of an offence.

35. **Penalty**

The maximum penalty for the breach of any of these by-laws or the Rules is such amount as may from time to time be prescribed by the Act presently:

- used for business or commercial purposes - $2,000.00
- any other case - $500.00.

36. **Naming Rights and Signage Rights**

The owner from time to time of Secondary Strata Lot 1 in C41144 (the Retail Store) shall be entitled for no licence fee to have the following rights:

36.1. the sole and exclusive right to determine the name of the building including the right to grant to such other parties as that owner shall determine in its absolute discretion naming rights in respect of the Building; and

36.2. the sole and exclusive right to grant to owners or Occupiers of the Building or third parties the right to erect signage on the Common Property including without limitation the roof and appropriate locations on the external walls forming part of the Common Property. In exercising its rights pursuant to this By-Law the owner must comply with the provisions of By-Law 13.6.2 (approvals), provided that the owner shall not be obliged to comply with the other provisions of By-Law 6;

36.3. the owner of the Retail Store shall be solely responsible for any costs and expenses incurred in respect of that portion of the Common Property upon which signage is erected pursuant to this By-law including all costs of repair and maintenance together with all costs incurred in respect of electricity supplied to any such signage.

37. **Telecommunications Licence**

The owner from time to time of the Retail Store shall be entitled for no licence fee to have the following rights:

37.1. the sole and exclusive right to install and maintain on that portion of the Common Property comprising the roof such telecommunications equipment as the owner shall in its absolute discretion determine including without limitation antennas, receivers, radio transmitters and associated cabling;

37.2. the sole and exclusive right to grant to owners or Occupiers of the Building or third parties the right to place telecommunications equipment on those portions of the Common Property comprising the roof. In exercising its rights pursuant to this by-law the owner must comply with the provisions of by-law 13.6.2 (approvals), provided that the owner shall not be obliged to comply with the other provisions of by-law 6; and

37.3. the owner of the Retail Store shall be solely responsible for any costs and expenses incurred in respect of those portions of the Common Property upon which any equipment is erected pursuant to this By-law including all costs of repair and maintenance together with all costs in respect of electricity supplied to that equipment.

38. **Permits**

38.1. In any By-Law of the Corporation, unless the contrary intention is clearly indicated, the words "the consent of the Corporation" means the permission of the Corporation given in the form of a written permit.

38.2. The Corporation shall have the power to grant permits in respect of any activity in or on the Community Parcel.

38.3. The Corporation may attach such conditions to a permit as it thinks fit and may vary or revoke such conditions or impose new conditions by notice in writing to the permit holder.

38.4. The Corporation may grant a permit either for a term of up to twelve (12) months or for an identified activity or schedule of activities as it thinks appropriate.

38.5. A permit holder shall comply with each and every condition of the permit.

Each event which is a breach of the permit shall constitute a separate offence under these By-Laws.

38.6. A permit holder shall pay to the Corporation in advance, such fee as may be determined by the Corporation for the Corporation issuing the permit to the permit holder.

38.7. Subject to the terms of the permit, the Corporation may cancel, suspend or revoke the permit at any time by notice in writing to the permit holder.

39. Compensation to Corporation

39.1. The proprietor or Occupier of a Lot shall compensate the Corporation in respect of any damage to the Common Property or personal property vested in the Corporation caused by that proprietor or Occupier or their respective tenants, licensees or invitees.

39.2. In circumstances where the Corporation arranges for a service call to the Community Parcel and the reason for that service call relates to a particular lot or lots or is necessitated by reason of an act or omission of an owner or Occupier then the Corporation shall be entitled to recover the costs incurred in respect of such service call directly from the relevant owner or Occupier.

40. No Trade or Business From Residential Lots

40.1. The owner or Occupier of a Residential Lot must not use that Lot or any part of the Common Property for any trade or business including the sale or offering for sale of any goods or merchandise nor permit others to do so.

40.2. The Owner or Occupier of the Retail/Commercial Lots may carry on a trade or business from the relevant Lot, provided:

40.2.1. the development plan governing the use of that Lot permits the trade or business to be carried on from that Lot;

40.2.2. any requirements in respect of the trade or business stipulated by any relevant authority from time to time are complied with;

40.2.3. the trade or business can be carried on and is carried on without causing undue nuisance to the proprietors and Occupiers of other Lots; and

40.2.4. in respect of Retail/Commercial Lots the trade or business must not be undertaken outside the hours of 7.00 a.m. to 10.30 p.m. Sunday-Thursday and 7.00 a.m. to 11.30 p.m. on Friday and Saturdays and Public Holidays (subject to review and confirmation).

41. Building Warranties

The Corporation will, if the Developer is able to procure the Builder so to do, enter into a Deed with the Builder pursuant to which Deed the Builder will provide to the Corporation warranties in form similar to the statutory warranties contained in Section 32(2) of the Building Work Contractors Act 1995 with intent that the Corporation may directly enforce a breach of those warranties by the Builder. The Deed will incorporate the warranties contained in section 32(2) of the Building Work Contractors

Act 1995 and otherwise be in a form reasonably satisfactory to the Corporation the Builder and the Developer.

42. **Air Conditioning Equipment**

42.1. All air conditioning equipment including condensers which provide air conditioning services exclusively to individual Lots will be situated on the Primary Common Property.

42.2. In the event that any air conditioning equipment referred to in By-Law 42.1 or any part thereof including any condenser is situated on the Common Property then the owner of that equipment will have an easement appurtenant to the owner's Lot over the Common Property by virtue of the operation of Section 24(1)(c)(i) of the Act.

43. **Contributions by Owners**

43.1. In determining the financial contribution to be levied against Lotholders, the Corporation must have regard to the benefit derived by the Lotholders in respect of the relevant expenditure for which the contribution is to be levied.

43.2. Without limiting the provision of the By-Law 43.1:

43.2.1. Lotholders will not be required to contribute towards costs and expenses incurred in respect of any common property to which a Lotholder does not have access or in respect of common property including infrastructure and plant and equipment which does not service the Lotholders Lot.

43.2.2. By way of example - the Lotholders and occupiers of the secondary "Retail/Commercial" and "SOHO" Lots shall not without the consent of the Corporation be entitled to access any part of the building other than the relevant Retail/Commercial Lot and SOHO of which they are the owner or Occupier any common property forming part of the Retail/Commercial and SOHO lots secondary scheme (i.e., lift access restriction to Levels 3, 4 and 5).

43.3. The Corporation authorizes and directs the body corporate manager to apply this clause in respect of an appropriate adjustment and determination of contributions and sinking fund levies, other than in accordance with the schedule of lot entitlements, pursuant to section 114 (3) of the Act.

44. Retail/Commercial Lots

44.1. This By-Law shall apply only to the Retail/Commercial Lots.

44.2. A grease arrestor to the extent that one is required in respect of a Retail/Commercial Lot can only be located either:

44.2.1. in that portion of the common property in the basement of the Building marked "Grease Arrestor Tank" ("Grease Arrestor Tank"); or

44.2.2. in such other part of the Common Property as the Corporation shall approve.

44.2.3. The Corporation must allow the connection and installation by the Developer or an Owner or Occupier of a Retail/Commercial Lot of a grease arrestor in the area marked "Grease Arrestor Tank" and must not unreasonably withhold its consent to the installation of a grease arrestor pursuant to By-law 44.2.2 and must further permit the installation and connection of all plumbing from the grease arrestor in the Grease Arrestor Tank or such other approved area to the relevant Community Lot.

45. Caretaker Arrangements

45.1. The Developer will appoint a resident caretaker ("Caretaker") (owner/builder associated with the Developer) to carry out and effect maintenance repairs and "janitor" services for and to the Common Property pursuant to a formal contractual agreement on reasonable terms determined by the Developer ("Caretaker Agreement"),

45.1.1. from Plan Deposit for a period of 3 months, at its cost

45.1.2. thereafter at the cost of the Corporation;

and may require the Corporation to enter into a Caretaker Agreement with the Caretaker (as a direct agreement or as an assignment), and a Lotholder and the Corporation shall do all things reasonably necessary to give effect to the intent of this clause.

FORM U Original LF 12823782
CUSTOMER REFERENCE

16:51 07-Nov-2017
13 of 14

LANDS TITLES REGISTRATION OFFICE

SOUTH AUSTRALIA

LODGEMENT FOR FILING UNDER THE COMMUNITY TITLES ACT 1996

FORM APPROVED BY THE REGISTRAR-GENERAL

BELOW THIS LINE FOR OFFICE PURPOSES ONLY

SERIES NO	PREFIX
B2	LF

AGENT CODE

LODGED BY: : **LYNCH MEYER** **MSLM**

CORRECTION TO: **MSLM**

SUPPORTING DOCUMENTATION LODGED WITH INSTRUMENT (COPIES ONLY)

1

2

3

4

5

PICK-UP NO.	
CP	

CORRECTION	PASSED

FILED 13/11/17

REGISTRAR-GENERAL SOUTH AUSTRALIA

Mark McSid PRO REGISTRAR-GENERAL

PRIVACY COLLECTION STATEMENT: The information in this form is collected under statutory authority and is used for maintaining publicly searchable registers and indexes. It may also be used for authorised purposes in accordance with Government legislation and policy requirements.

© LAWSOFT PTY LTD (June 2016) Ref: <DocumentID>

605484

g. SA Water Corporation advises that the developer should inform potential purchasers of the community lots in regards to the servicing arrangements and seek written agreement prior to settlement, as future alterations would be at FULL cost to the owner/applicant.

h. SA Water advises that on receipt of the developer details and site specifications an investigation will be carried out to determine if the connections to your development will be standard or non- standard fees.

Brett Miller
TEAM LEADER – CBD & INNER METRO
as delegate of the
DEVELOPMENT ASSESSMENT COMMISSION

TERMS OF INSTRUMENT NOT CHECKED
BY LANDS TITLES OFFICE

SCHEME DESCRIPTION
DEVELOPMENT NO. 155/C028/17

SECONDARY STRATA SCHEME DESCRIPTION

COMMUNITY PLAN NO. C41146
"VERDE"

RESIDENTIAL LOTS

54-60 KING WILLIAM STREET, KENT TOWN

TERMS OF INSTRUMENT NOT CHECKED
BY LANDS TITLES OFFICE

SCHEME DESCRIPTION
DEVELOPMENT NO. 155/C028/17

Index

Page No.

1. Identification of Community Parcel, Lots and Common Property 3
2. Purposes for which Lots and Common Property may be used 3
3. Standard of Buildings and Other Improvements 3
4. Subsequent Stages of the Plan of Community Division 4
5. Obligations to Develop Lots 4
6. Developer's Obligations to Improve or Develop the Common Property 4
7. Conditions of Development imposed pursuant to the Development Act 1993 4
8. Other Important Features of the Scheme 4
9. Other Information required by Regulation 4
10. Completion 4

Certified correctly by prepared in accordance with the requirements of the *Community Titles Act 1996* by the person who prepared the document

.....

S. M. Appleyard - Legal Practitioner
190 Flinders Street
Adelaide SA 5000

1. Identification of the Community Parcel, Lots and Common Property

1.1. The community parcel and the lots and common property to which the parcel is to be divided are identified in the plan of community division to be lodged with the Registrar General together with this Scheme Description in respect of Secondary Community Plan C41146 situated at 54-60 King William Street, Kent Town.

1.2. The community plan for the scheme is a plan of community division (strata plan) arising from the division of Primary Lot 1003 within a five (5) level building to create forty seven (47) secondary strata lots comprising:-

1.2.1. forty seven (47) residential lots at levels Three to Five (Second, Third and Fourth Floors); and

1.2.2. carpark and balcony/courtyard subsidiaries at Levels One through to Five (Ground to Fourth Floor)

1.2.3. service infrastructure and common property.

1.3. The Development is a plan of community division (strata scheme) pursuant to Section 9 of the *Community Titles Act 1996*, construction of which the developer has completed prior to conveying any lot within the development.

2. Purposes for which Strata Lots and Common Property may be used

2.1. Secondary Lots 1-47 (inclusive) may only be used for residential purposes and will not be further divided.

2.2. The common property will be used for access to the lots and lot subsidiaries, common amenities and for the accommodation of service infrastructure, within the development.

3. Standard of buildings and other improvements

The improvements and alterations will are:

3.1. in accordance with the Building Code of Australia; and

3.2. designed and constructed in a manner and to a standard in accordance with all drawings and conditions of development approval for the built form in Development Application No. 155/754/2014 (Built Form Development Approval).

4. Stages of the Plan of Community Division

The development is a secondary scheme creating a secondary strata plan of community division (strata scheme) and was completed in one stage in accordance with the Built Form Development Approval.

5. Obligations to Develop Lots

5.1. The development was completed in one stage from commencement of works.

5.2. Subject to clause 3 of this Scheme Description the standard of the work performed and the materials used for the development are of a standard as the Developer and its architect in their absolute discretion have determined.

6. Developer's Obligations to Improve or Develop the Common Property

6.1. The Developer has constructed and installed relevant service infrastructure as necessary in accordance with the plans and specifications approved for the development.

6.2. Subject to clause 3 of this Scheme Description the standard of the work performed and the materials used on the common property are of a standard as the Developer and its architect in their absolute discretion have determined.

7. Conditions of Development imposed Pursuant to the Development Act 1993

Refer Annexure "A" Development Approval dated 12 July 2017 under the *Development Act* of three (3) pages.

8. Other important features of the Scheme

Each of the secondary lots are not capable of further division by a tertiary plan.

9. Other information required by regulation

No other information is required by the regulations.

10. Completion

The development is completed.

TERMS OF INSTRUMENT NOT CHECKED
BY LANDS TITLES OFFICE

SCHEME DESCRIPTION
DEVELOPMENT NO. 155/C028/17

Endorsement by Relevant Development Authority

State Commission Assessment Panel hereby endorses this Scheme Description in accordance with Section 14(4)(d) of the *Community Titles Act 1996*.

1. All the consents or approvals required under the *Development Act 1993* in relation to the division of the land (and a change in the use of the land (if any) in accordance with this Scheme Description and the relevant plan of community division under the *Community Titles Act 1996* have been granted.*

   OR

   ~~No consent or approval is required under the *Development Act 1993* in relation to the division of the land (or a change in the use of the land) in accordance with this scheme description~~.*

   (*delete that which is not applicable)

2. This endorsement does not limit a relevant authority's right to refuse, or to place conditions on, development authorisation under the *Development Act 1993* in relation to any other development envisaged by this Scheme Description.

This Scheme Description is endorsed by the State Commission Assessment Panel

Signed: .....
Principal Planner BRETT MILLER
As delegate of the State Commission Assessment Panel

Witness: .....

Date: 6/10/17

"ANNEXURE A"

Development Approval dated 12 July 2017
of three (3) pages (refer clause 7)

South Australia - Regulation 42 under the Development Act 1993

DECISION NOTIFICATION FORM

Contact Officer: Tom Victory
Telephone: 8402 1843
KNET Reference:

Development Number:
155/C028/17
Council Reference:
N/A

FOR DEVELOPMENT APPLICATION

DATED: 26 April 2017
REGISTERED ON: 26 April 2017

TO: Morgan and Hansen
C-/ John C Bested and Associates Pty Ltd
362 Magill Road
KENSINGTON PARK SA 5068

EMAIL: surveyors@johnbested.com.au

LOCATION OF PROPOSED DEVELOPMENT:

Lot/Plan or Sect/HD	Street / Road	Suburb/ Locality	Hundred	Title
A17 in FP100071	King William Street	Kent Town	Adelaide	5088/528
A18 in FP100071	King William Street	Kent Town	Adelaide	5088/529
A7 in FP 108223	King William Street	Kent Town	Adelaide	5192/227
A173 in FP 211769	King William Street	Kent Town	Adelaide	5720/848

NATURE OF PROPOSED DEVELOPMENT: Land Division (Secondary Community Strata) - 1 into 47

From: **DEVELOPMENT ASSESSMENT COMMISSION**

In respect of this proposed development you are informed that:

NATURE OF DECISION	CONSENT GRANTED	NO. OF CONDITIONS	CONSENT REFUSED	NOT APPLICABLE
Development Plan Consent	GRANTED	1		
Land Division	-			
Land Division [Strata]	GRANTED	3		
Public Space	-			
DEVELOPMENT APPROVAL	**GRANTED**	**4**		

Any conditions imposed are set out on the attached sheet.

Brett Miller
TEAM LEADER – CBD & INNER METRO
as delegate of the
DEVELOPMENT ASSESSMENT COMMISSION
Date of Decision: 12 July 2017
[2] **Sheets Attached**

DEVELOPMENT APPLICATION – 155/C028/17

Planning Conditions

1. That except where minor amendments may be required by other relevant Acts, or by conditions imposed by this application, the development shall be established in strict accordance with the details and plans submitted in Development Application No 155/C028/17.

    - Plan of Division by John C Bested and Associates Pty Ltd, Map Ref 6628/42/H, Sheets 1 to 7, Number 3

Land Division Requirements

2. The financial requirements of the SA Water Corporation shall be met for the provision of water supply and sewerage services. (SA Water H0058926).

3. A final plan complying with the requirements for plans as set out in the Manual of Survey Practice Volume 1 (Plan Presentation and Guidelines) issued by the Registrar General to be lodged with the Development Assessment Commission for Land Division Certificate purposes.

4. Payment of $307096.00 into the Planning and Development Fund (46 allotment/s @ $6676.00 /allotment).

    Note - Payment may be made by credit card via the internet at www.edala.sa.gov.au or by phone (7109 7040), by cheque payable to the Development Assessment Commission marked "Not Negotiable" and sent to GPO Box 1815, Adelaide 5001 or in person, at Planning Services, Department of Planning, Transport and Infrastructure (DPTI) Level 5, 50 Flinders Street, Adelaide SA 5000.

Advisory Notes

a. The development must be substantially commenced or application for certificate made within 12 months of the date of this Notification, unless this period has been extended by the Development Assessment Commission.

b. The authorisation will lapse if not commenced within 12 months of the date of this Notification.

c. The applicant is also advised that the final land division certificate must be obtained from the Development Assessment Commission to complete the development within 3 years of the date of the Notification unless this period is extended by the Commission.

d. The applicant has a right of appeal against the conditions which have been imposed on this Development Plan Consent or Development Approval.

e. Such an appeal must be lodged at the Environment, Resources and Development Court within two months from the day of receiving this notice or such longer time as the Court may allow.

f. The applicant is asked to contact the Court if wishing to appeal. The Court is located in the Sir Samuel Way Building, Victoria Square, Adelaide, (telephone number 8204 0289).

PURPOSE:	SECONDARY COMMUNITY STRATA	AREA NAME:	KENT TOWN	APPROVED: STEVE ANDREWS 04/10/2017	C41146
MAP REF:	6628/42/H	COUNCIL:	THE CORPORATION OF THE CITY OF NORWOOD PAYNEHAM AND ST. PETERS	DEPOSITED: MARK MCNEIL 13/11/2017	SHEET 1 OF 7
LAST PLAN:	C41143	DEVELOPMENT NO:	155/C028/17/001/49833		58802_text_01_v06_Version_6

AGENT DETAILS: JOHN C BESTED & ASSOCIATES PTY LTD
362 MAGILL RD
KENSINGTON PARK SA 5068
PH: 83327111
FAX: 83641829

AGENT CODE: JCBA

REFERENCE: 17160.6

SURVEYORS CERTIFICATION: I ASHLEY GREG WINDOW , a licensed surveyor under the Survey Act 1992, certify that (a) I am uncertain about the location of that part of the service infrastructure shown between the points marked > and < on the plan; and (b) This community plan has been correctly prepared in accordance with the Community Titles Act 1996
4th day of October 2017 Ashley Window Licensed Surveyor

SUBJECT TITLE DETAILS:

PREFIX	VOLUME	FOLIO	OTHER	PARCEL	NUMBER	PLAN	NUMBER	HUNDRED / IA / DIVISION	TOWN	REFERENCE NUMBER
PT CT	5720	848		LOT(S)	1003	C	41143	ADELAIDE		
PT CT	5192	227		LOT(S)	1003	C	41143	ADELAIDE		
PT CT	5088	528		LOT(S)	1003	C	41143	ADELAIDE		
PT CT	5088	529		LOT(S)	1003	C	41143	ADELAIDE		

OTHER TITLES AFFECTED:

EASEMENT DETAILS:

STATUS	LAND BURDENED	FORM	CATEGORY	IDENTIFIER	PURPOSE	IN FAVOUR OF	CREATION

ANNOTATIONS: PRIMARY PLAN IS C41143
ENCROACHMENT OF FEATURE PANEL A. FEATURE PANEL B. FEATURE PANEL C. FEATURE PANEL D. FEATURE PANEL E. FEATURE PANEL F AND FEATURE PANEL G OCCURS OVER KING WILLIAM STREET VIDE C41143
AMENDMENT TO COURTYARD SUBSIDIARY SHEET 7 VIDE PR 12828571 PRO. R.G. 20.11.2017

C41146

SHEET 2 OF 7

58802_pland_1_V03_Version_6

BEARING DATUM: ① - ② 56°37'20"
DERIVATION: F58965 ADOPTED

TOTAL AREA :

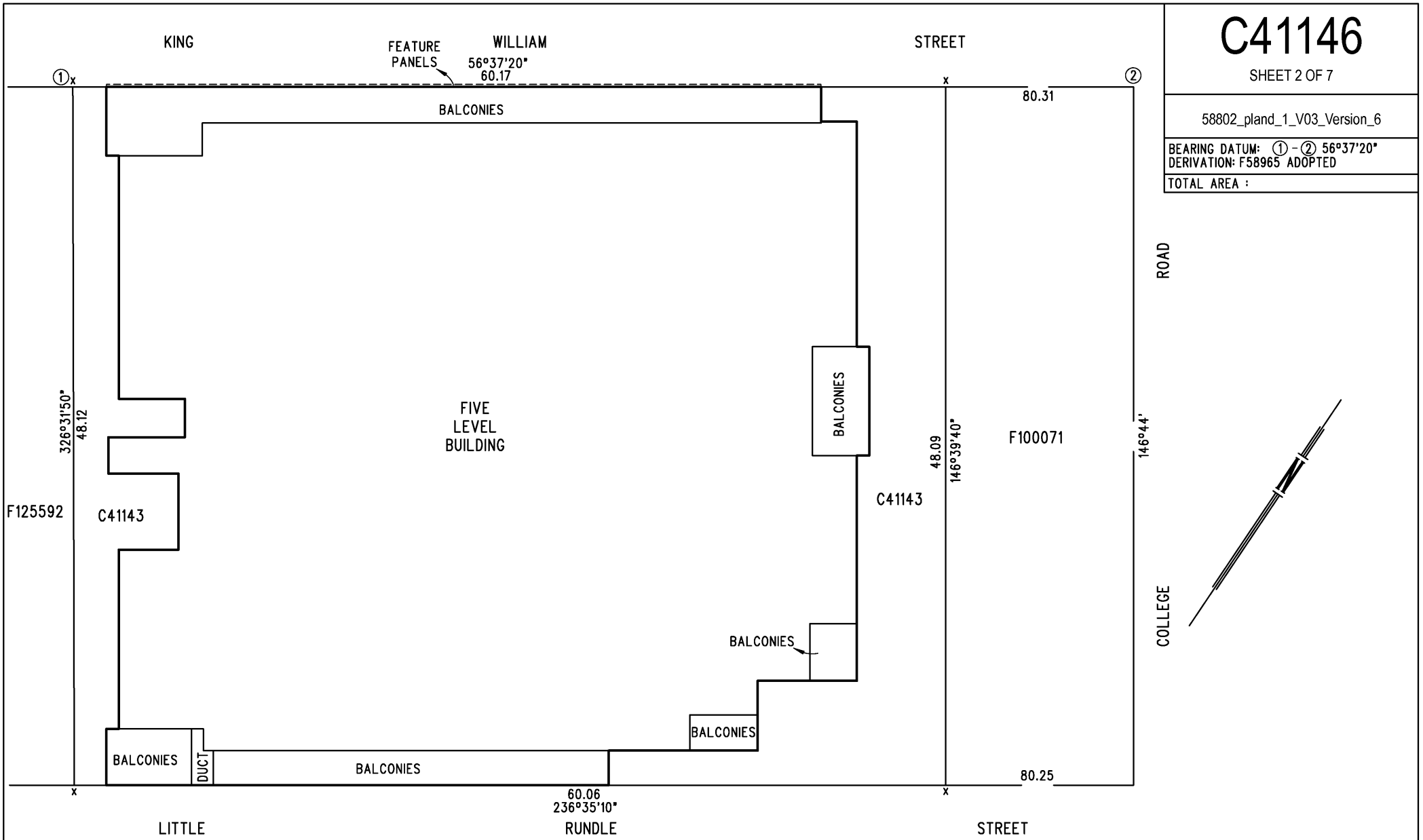

SITE PLAN

0 2.5 5 7.5 10 12.5

SCALE - METRES

JOHN C BESTED & ASSOC PTY LTD
ABN 23 007 916 814
SURVEYING & PLANNING CONSULTANTS
362 MAGILL ROAD KENSINGTON PARK 5068
PHONE (08) 8332 7111 FAX (08) 8364 1829
email surveyors@johnbested.com.au

REF	DRAWING	VERSION
17160.6	17160.6-COM	8

C41146

SHEET 3 OF 7

58802_pland_2_V03_Version_6

KING WILLIAM STREET

LITTLE RUNDLE STREET

F125592

C41143

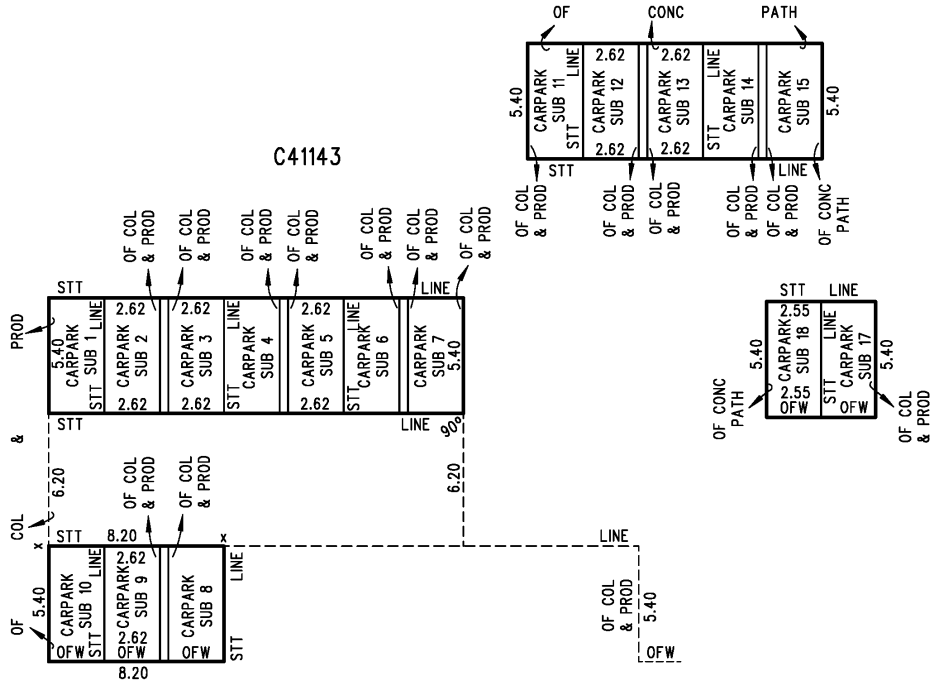

F100071

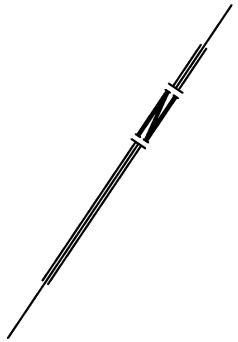

THE LOWER AND UPPER LIMITS OF LOT SUBSIDIARY SHOWN AS CARPARK ARE EXISTING FLOOR LEVEL AND 2.50 METRES ABOVE THE SAME RESPECTIVELY UNLESS LIMITED IN HEIGHT BY OVERHANGING STRUCTURES BELOW 2.50 METRES.

OF.....OUTSIDE FACE
COL.....COLUMN
PROD....PRODUCTION
CONC....CONCRETE
STT.....STRAIGHT
OFW.....OUTSIDE FACE WALL

LEVEL ONE - GROUND FLOOR

0 2.5 5 7.5 10 12.5

SCALE - METRES

JOHN C BESTED & ASSOC PTY LTD
ABN 23 007 916 814
SURVEYING & PLANNING CONSULTANTS
362 MAGILL ROAD KENSINGTON PARK 5068
PHONE (08) 8332 7111 FAX (08) 8364 1829
email surveyors@johnbested.com.au

REF	DRAWING	VERSION
17160.6	17160.6-COM	8

C41146

SHEET 4 OF 7

58802_pland_3_V03_Version_6

KING WILLIAM STREET

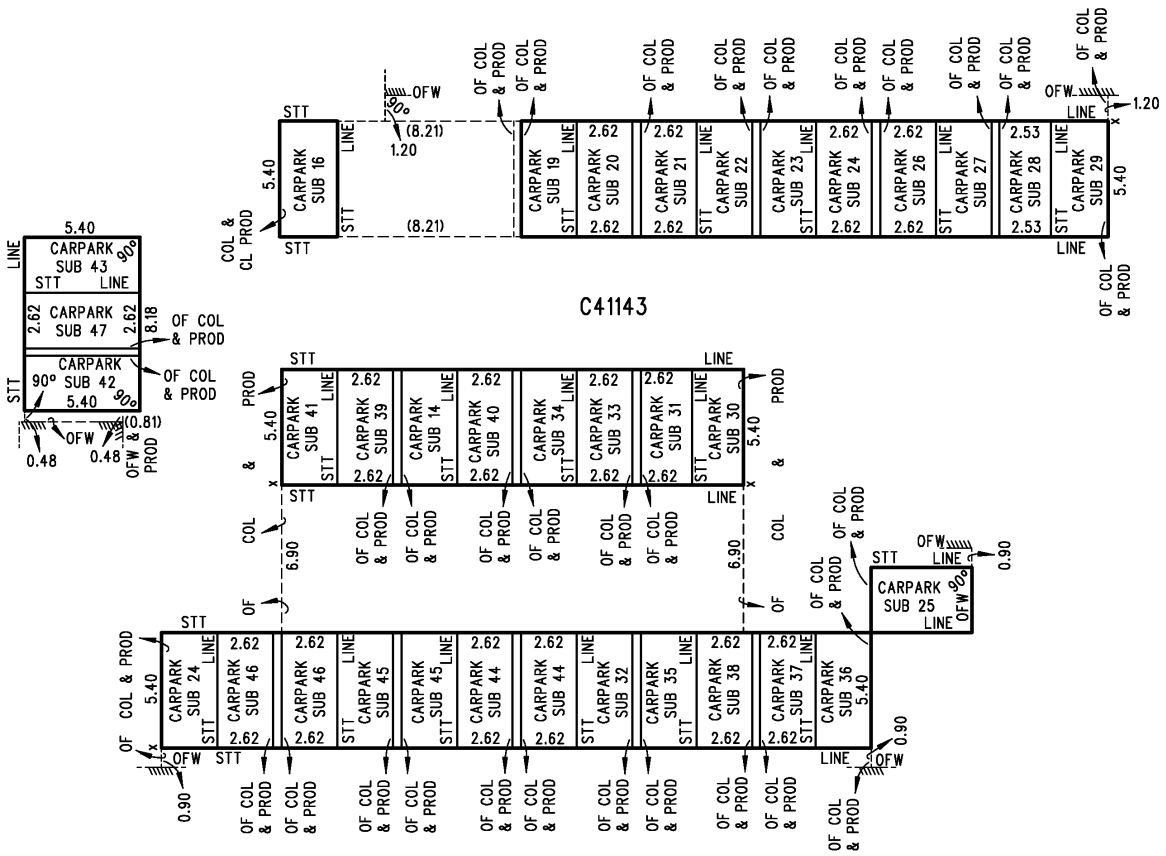

THE LOWER AND UPPER LIMITS OF LOT SUBSIDIARY SHOWN AS CARPARK ARE EXISTING FLOOR LEVEL AND 2.50 METRES ABOVE THE SAME RESPECTIVELY UNLESS LIMITED IN HEIGHT BY OVERHANGING STRUCTURES BELOW 2.50 METRES.

OF.....OUTSIDE FACE
COL.....COLUMN
PROD....PRODUCTION
CONC....CONCRETE
STT.....STRAIGHT
OFW.....OUTSIDE FACE WALL
CL.....CENTRELINE

F100071



LITTLE RUNDLE STREET

LEVEL TWO - FIRST FLOOR

0 2.5 5 7.5 10 12.5

SCALE - METRES

JOHN C BESTED & ASSOC PTY LTD
ABN 23 007 916 814
SURVEYING & PLANNING CONSULTANTS
362 MAGILL ROAD KENSINGTON PARK 5068
PHONE (08) 8332 7111 FAX (08) 8364 1829
email surveyors@johnbested.com.au

REF	DRAWING	VERSION
17160.6	17160.6-COM	8

C41146

SHEET 5 OF 7

58802_pland_4_V03_Version_6

KING WILLIAM STREET

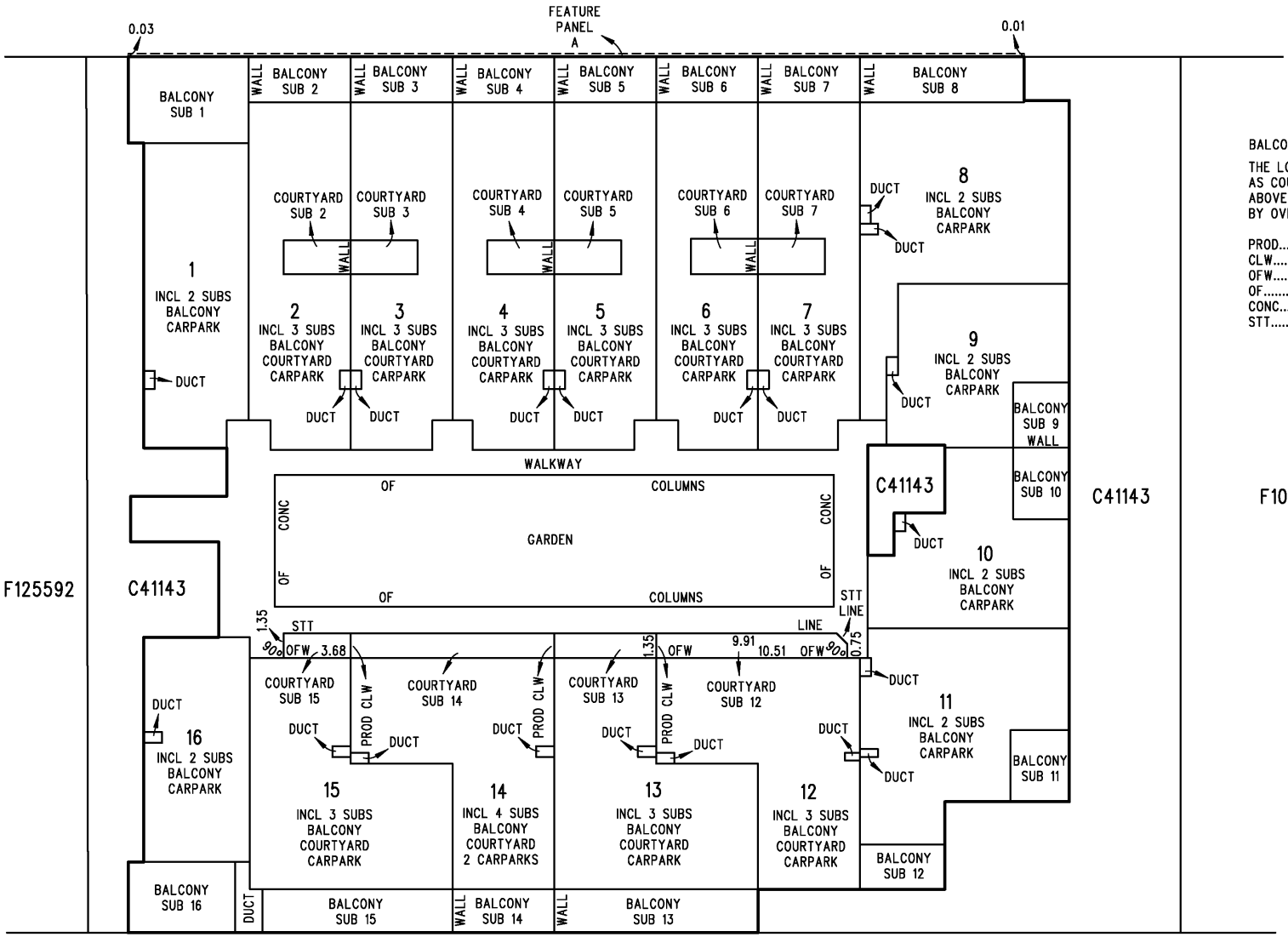

LITTLE RUNDLE STREET

BALCONIES ARE COVERED.

THE LOWER AND UPPER LIMITS OF LOT SUBSIDIARY SHOWN AS COURTYARD ARE EXISTING FLOOR LEVEL AND 2.70 METRES ABOVE THE SAME RESPECTIVELY UNLESS LIMITED IN HEIGHT BY OVERHANGING STRUCTURES BELOW 2.70 METRES.

PROD.....PRODUCTION
CLW.....CENTRELINE WALL
OFW.....OUTSIDE FACE WALL
OF.....OUTSIDE FACE
CONC.....CONCRETE
STT.....STRAIGHT

LEVEL THREE - SECOND FLOOR

0 2.5 5 7.5 10 12.5

SCALE - METRES

JOHN C BESTED & ASSOC PTY LTD
ABN 23 007 916 814
SURVEYING & PLANNING CONSULTANTS
362 MAGILL ROAD KENSINGTON PARK 5068
PHONE (08) 8332 7111 FAX (08) 8364 1829
email surveyors@johnbested.com.au

REF	DRAWING	VERSION
17160.6	17160.6-COM	8

C41146

SHEET 6 OF 7

58802_pland_5_V03_Version_6

KING STREET WILLIAM

FEATURE PANEL B 0.03

FEATURE PANEL C 0.03

FEATURE PANEL D 0.01

BALCONIES ARE COVERED

THE LOWER AND UPPER LIMITS OF LOT SUBSIDIARY SHOWN AS COURTYARD ARE EXISTING FLOOR LEVEL AND 2.70 METRES ABOVE THE SAME RESPECTIVELY UNLESS LIMITED IN HEIGHT BY OVERHANGING STRUCTURES BELOW 2.70 METRES.

PROD.....PRODUCTION
CLW.....CENTRELINE WALL
OFW.....OUTSIDE FACE WALL
OF.....OUTSIDE FACE
CONC.....CONCRETE
STT.....STRAIGHT

F100071

F125592

C41143

C41143

C41143

C41143

BALCONY SUB 17

BALCONY SUB 18

BALCONY SUB 19

BALCONY SUB 20

BALCONY SUB 21

BALCONY SUB 22

BALCONY SUB 23

BALCONY SUB 24

BALCONY SUB 25

BALCONY SUB 26

BALCONY SUB 27

BALCONY SUB 28

BALCONY SUB 29

BALCONY SUB 30

BALCONY SUB 31

BALCONY SUB 32

WALL

VOID

17 INCL 2 SUBS BALCONY CARPARK

18 INCL 2 SUBS BALCONY CARPARK

19 INCL 2 SUBS BALCONY CARPARK

20 INCL 2 SUBS BALCONY CARPARK

21 INCL 2 SUBS BALCONY CARPARK

22 INCL 2 SUBS BALCONY CARPARK

23 INCL 2 SUBS BALCONY CARPARK

24 INCL 3 SUBS BALCONY 2 CARPARKS

25 INCL 2 SUBS BALCONY CARPARK

26 INCL 2 SUBS BALCONY CARPARK

27 INCL 2 SUBS BALCONY CARPARK

28 INCL 3 SUBS BALCONY COURTYARD CARPARK

29 INCL 3 SUBS BALCONY COURTYARD CARPARK

30 INCL 3 SUBS BALCONY COURTYARD CARPARK

31 INCL 3 SUBS BALCONY COURTYARD CARPARK

32 INCL 2 SUBS BALCONY CARPARK

DUCT

WALKWAY

OF CONC CONC OF OF CONC

STT LINE

1.35 STT 90° OFW 3.68

COURTYARD SUB 31

COURTYARD SUB 30

COURTYARD SUB 29

COURTYARD SUB 28

PROD CLW

1.35 OFW 9.91 10.51 OFW 90° 0.75 STT LINE

LITTLE RUNDLE STREET

LEVEL FOUR - THIRD FLOOR

0 2.5 5 7.5 10 12.5

SCALE - METRES

JOHN C BESTED & ASSOC PTY LTD
ABN 23 007 916 814
SURVEYING & PLANNING CONSULTANTS
362 MAGILL ROAD KENSINGTON PARK 5068
PHONE (08) 8332 7111 FAX (08) 8364 1829
email surveyors@johnbested.com.au

REF	DRAWING	VERSION
17160.6	17160.6-COM	8

C41146

SHEET 7 OF 7

58802_pland_6_V04_Version_6

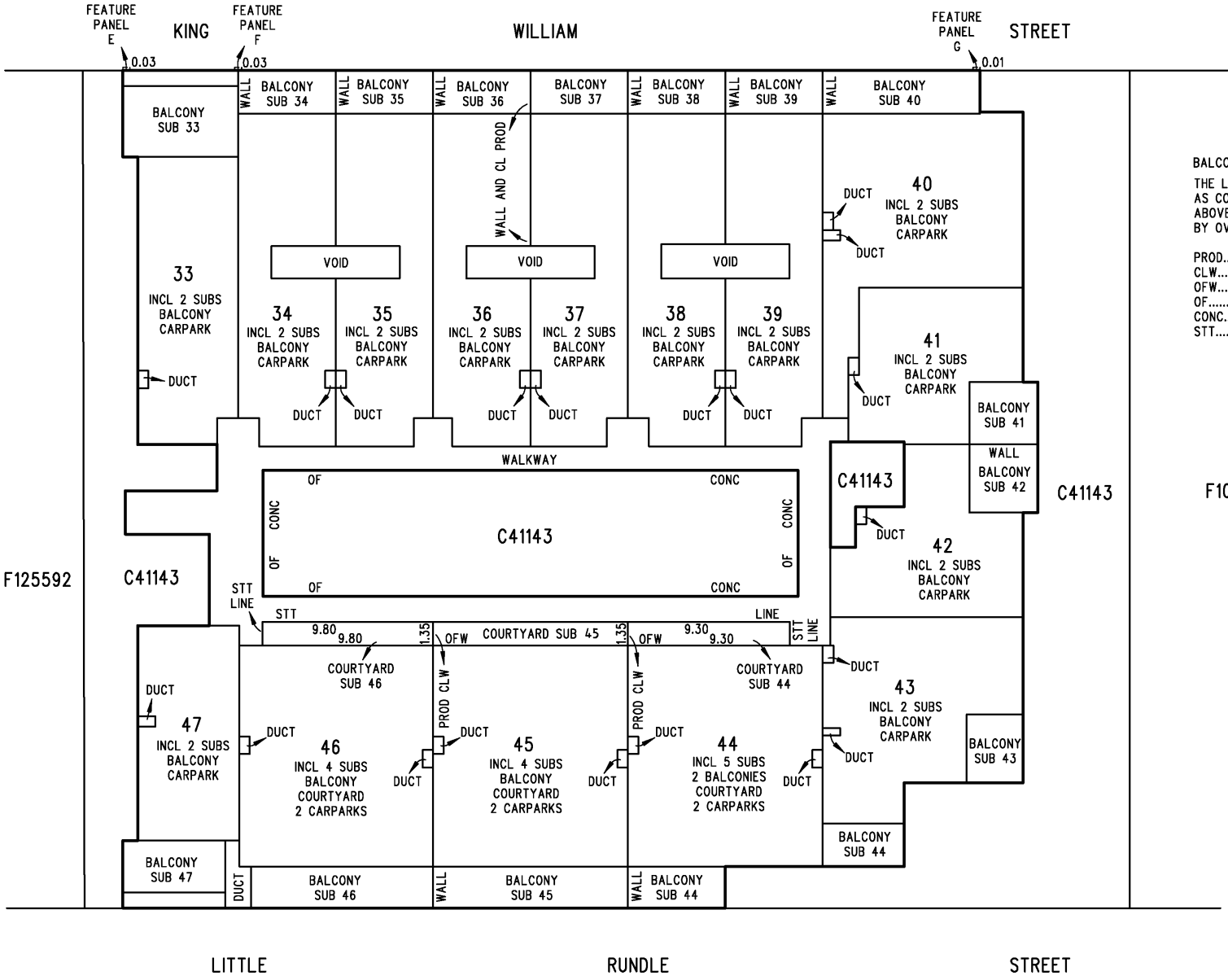

LEVEL FIVE - FOURTH FLOOR

0 2.5 5 7.5 10 12.5

SCALE - METRES

BALCONIES ARE COVERED

THE LOWER AND UPPER LIMITS OF LOT SUBSIDIARY SHOWN AS COURTYARD ARE EXISTING FLOOR LEVEL AND 2.70 METRES ABOVE THE SAME RESPECTIVELY UNLESS LIMITED IN HEIGHT BY OVERHANGING STRUCTURES BELOW 2.70 METRES.

PROD.....PRODUCTION
CLW.....CENTRELINE WALL
OFW.....OUTSIDE FACE WALL
OF.....OUTSIDE FACE
CONC.....CONCRETE
STT.....STRAIGHT

JOHN C BESTED & ASSOC PTY LTD
ABN 23 007 916 814
SURVEYING & PLANNING CONSULTANTS
362 MAGILL ROAD KENSINGTON PARK 5068
PHONE (08) 8332 7111 FAX (08) 8364 1829
email surveyors@johnbested.com.au

REF	DRAWING	VERSION
17160.6	17160.6-COM	8

LOT ENTITLEMENT SHEET

COMMUNITY PLAN NUMBER

C41146

SHEET 1 OF 2

ACCEPTED

Mark McGill 13/11/2017

PRO REGISTRAR-GENERAL

DEV. No. : 155/C028/17

SCHEDULE OF LOT ENTITLEMENTS		
LOT	**LOT ENTITLEMENT**	**SUBDIVIDED**
1	193	
2	192	
3	204	
4	204	
5	204	
6	243	
7	192	
8	225	
9	188	
10	168	
11	210	
12	204	
13	226	
14	209	
15	226	
16	148	
17	207	
18	194	
19	194	
20	194	
21	194	
22	194	
23	205	
24	228	
25	188	
26	168	
27	210	
28	207	

LOT ENTITLEMENT SHEET

SCHEDULE OF LOT ENTITLEMENTS		
LOT	**LOT ENTITLEMENT**	**SUBDIVIDED**
29	226	
30	209	
31	218	
32	148	
33	218	
34	216	
35	216	
36	205	
37	205	
38	216	
39	205	
40	282	
41	199	
42	198	
43	238	
44	344	
45	333	
46	333	
47	172	
AGGREGATE	**10,000**	

COMMUNITY PLAN NUMBER

C41146

SHEET 2 OF 2

ACCEPTED

Mark Mitchell 13/11/2017

PRO REGISTRAR-GENERAL

DEV. No. : 155/C028/17

CERTIFICATE OF LAND VALUER

I ***Zac Vartuli***

being a land valuer within the meaning of the Land Valuers Act 1996 certify that the schedule is correct for the purposes of the Community Titles Act 1996

Dated the 27th day of September 2017

Signature of Land Valuer

PURPOSE:	PRIMARY COMMUNITY STRATA	AREA NAME:	KENT TOWN	APPROVED: STEVE ANDREWS 04/10/2017	C41143
MAP REF:	6628/42/H	COUNCIL:	THE CORPORATION OF THE CITY OF NORWOOD PAYNEHAM AND ST. PETERS		
LAST PLAN:	F58965	DEVELOPMENT NO:	155/C025/17/001/49609	DEPOSITED: MARK MCNEIL 13/11/2017	SHEET 1 OF 9
					58767_text_01_v04_Version_4

AGENT DETAILS: JOHN C BESTED & ASSOCIATES PTY LTD
362 MAGILL RD
KENSINGTON PARK SA 5068
PH: 83327111
FAX: 83641829

AGENT CODE: JCBA

REFERENCE: 17160.3

SURVEYORS CERTIFICATION: I ASHLEY GREG WINDOW , a licensed surveyor under the Survey Act 1992, certify that (a) I am uncertain about the location of that part of the service infrastructure shown between the points marked > and < on the plan; and (b) This community plan has been correctly prepared in accordance with the Community Titles Act 1996
28th day of September 2017 Ashley Window Licensed Surveyor

SUBJECT TITLE DETAILS:

PREFIX	VOLUME	FOLIO	OTHER	PARCEL	NUMBER	PLAN	NUMBER	HUNDRED / IA / DIVISION	TOWN	REFERENCE NUMBER
CT	5192	227		ALLOTMENT(S)	7	F	108223	ADELAIDE		
CT	5088	528		ALLOTMENT(S)	17	F	100071	ADELAIDE		
CT	5088	529		ALLOTMENT(S)	18	F	100071	ADELAIDE		
CT	5720	848		ALLOTMENT(S)	173	F	211769	ADELAIDE		

OTHER TITLES AFFECTED:

EASEMENT DETAILS:

STATUS	LAND BURDENED	FORM	CATEGORY	IDENTIFIER	PURPOSE	IN FAVOUR OF	CREATION
EXTINGUISH	18 IN F100071	SHORT	FREE AND UNRESTRICTED RIGHT(S) OF WAY	A IN F100071		17 IN F100071	
NEW	COMMON PROPERTY	SERVICE	EASEMENT(S)	C(T/F)	FOR ELECTRICITY SUPPLY PURPOSES	DISTRIBUTION LESSOR CORPORATION (SUBJECT TO LEASE 8890000)	223LG RPA

ANNOTATIONS: LOT 1001 EXISTS AT BASEMENT, LEVEL ONE-GROUND FLOOR, LEVEL TWO-FIRST FLOOR, LEVEL THREE-SECOND FLOOR, LEVEL FOUR-THIRD FLOOR, LEVEL FIVE-FOURTH FLOOR AND ROOF LEVEL.
LOT 1002 EXISTS AT LEVEL ONE-GROUND FLOOR AND LEVEL TWO-FIRST FLOOR
LOT 1003 EXISTS AT LEVEL ONE-GROUND FLOOR, LEVEL TWO-FIRST FLOOR, LEVEL THREE-SECOND FLOOR, LEVEL FOUR-THIRD FLOOR AND LEVEL FIVE-FOURTH FLOOR.
ENCROACHMENT OF CANOPY A. CANOPY B. FEATURE PANEL A. FEATURE PANEL B. FEATURE PANEL C. FEATURE PANEL D. FEATURE PANEL E. FEATURE PANEL F. FEATURE PANEL G AND FEATURE PANEL H OCCURS OVER KING WILLIAM STREET

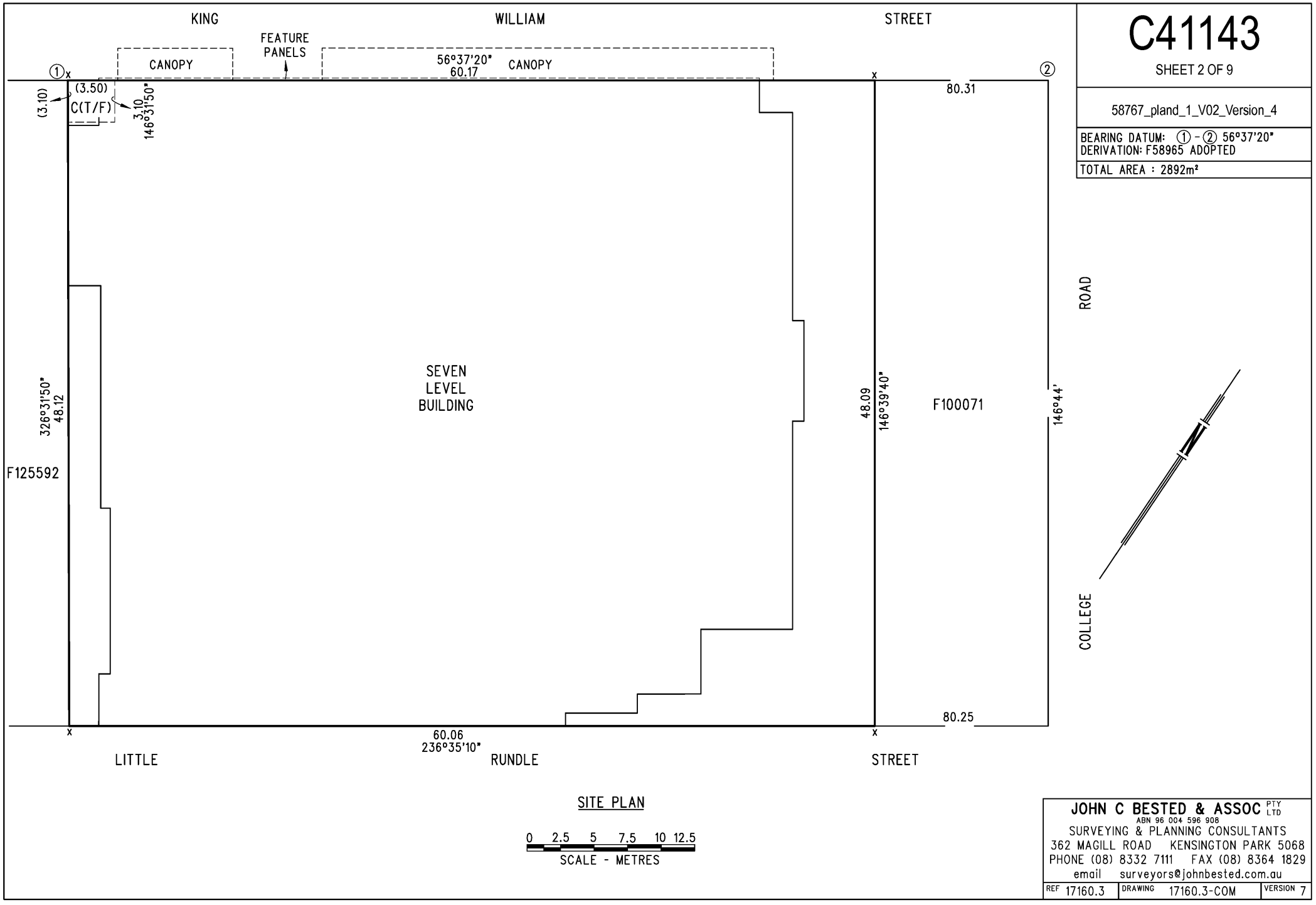

SITE PLAN

0 2.5 5 7.5 10 12.5
SCALE - METRES

C41143

SHEET 2 OF 9

58767_pland_1_V02_Version_4

BEARING DATUM: ① - ② 56°37'20"
DERIVATION: F58965 ADOPTED

TOTAL AREA : 2892m²

JOHN C BESTED & ASSOC PTY LTD
ABN 96 004 596 908
SURVEYING & PLANNING CONSULTANTS
362 MAGILL ROAD KENSINGTON PARK 5068
PHONE (08) 8332 7111 FAX (08) 8364 1829
email surveyors@johnbested.com.au

REF	DRAWING	VERSION
17160.3	17160.3-COM	7

C41143

SHEET 3 OF 9

58767_pland_2_V02_Version_4

KING WILLIAM STREET

RETENTION TANKS

1001

LIFT PIT | LIFT PIT

F125592

F100071



LITTLE RUNDLE STREET

BASEMENT

0 2.5 5 7.5 10 12.5

SCALE - METRES

JOHN C BESTED & ASSOC PTY LTD
ABN 96 004 596 908
SURVEYING & PLANNING CONSULTANTS
362 MAGILL ROAD KENSINGTON PARK 5068
PHONE (08) 8332 7111 FAX (08) 8364 1829
email surveyors@johnbested.com.au

REF	DRAWING	VERSION
17160.3	17160.3-COM	7

C41143

SHEET 4 OF 9

58767_pland_3_V02_Version_4

OF.....OUTSIDE FACE
CONC.....CONCRETE
COL.....COLUMN
PROD.....PRODUCTION
OFW.....OUTSIDE FACE WALL
STT.....STRAIGHT

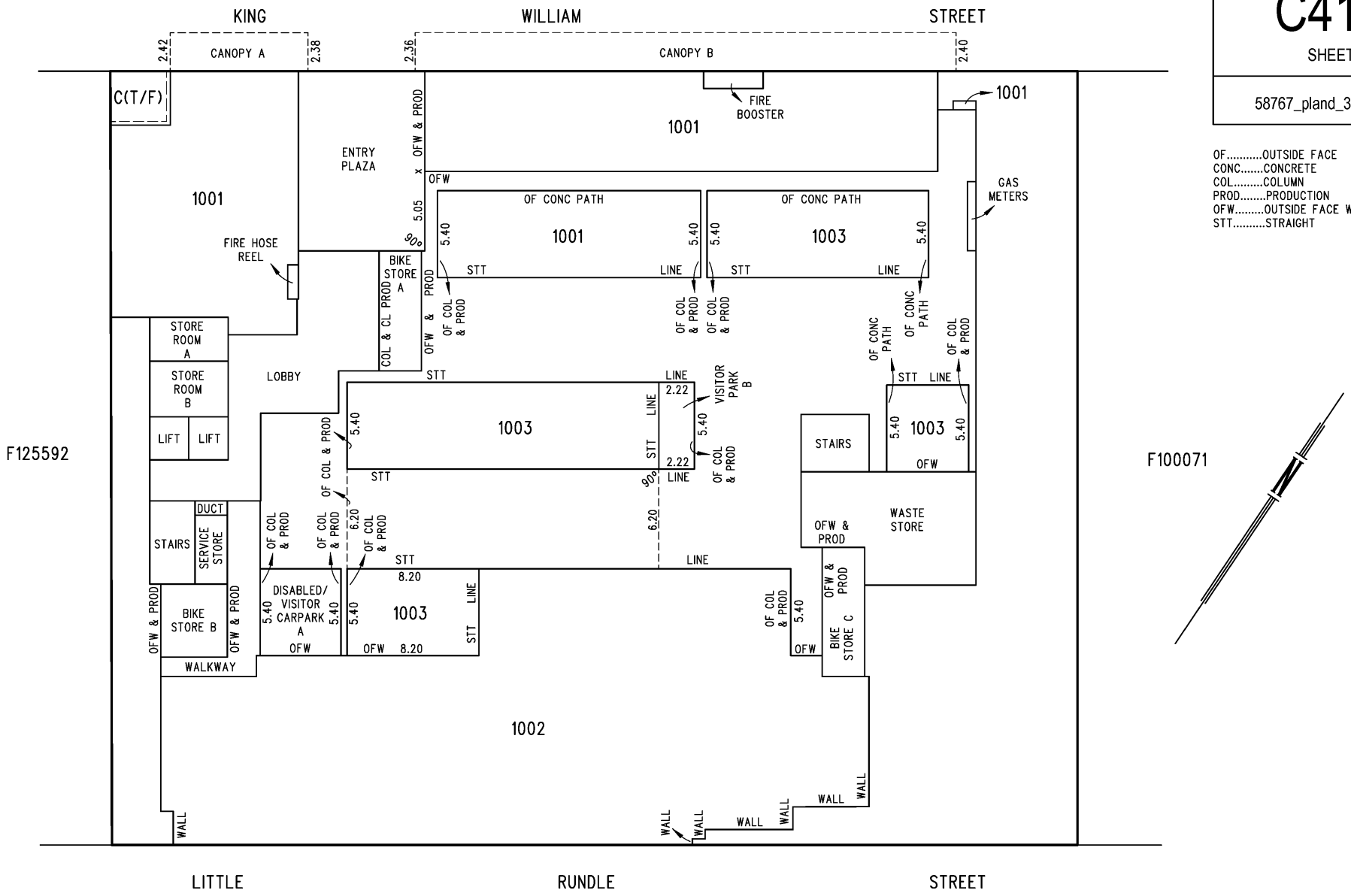

LEVEL ONE - GROUND FLOOR

0 2.5 5 7.5 10 12.5

SCALE - METRES

JOHN C BESTED & ASSOC PTY LTD
ABN 96 004 596 908
SURVEYING & PLANNING CONSULTANTS
362 MAGILL ROAD KENSINGTON PARK 5068
PHONE (08) 8332 7111 FAX (08) 8364 1829
email surveyors@johnbested.com.au

REF	DRAWING	VERSION
17160.3	17160.3-COM	7

C41143

SHEET 5 OF 9

58767_pland_4_V02_Version_4

OF.....OUTSIDE FACE
COL.....COLUMN
PROD.....PRODUCTION
OFW.....OUTSIDE FACE WALL
STT.....STRAIGHT
CL.....CENTRELINE

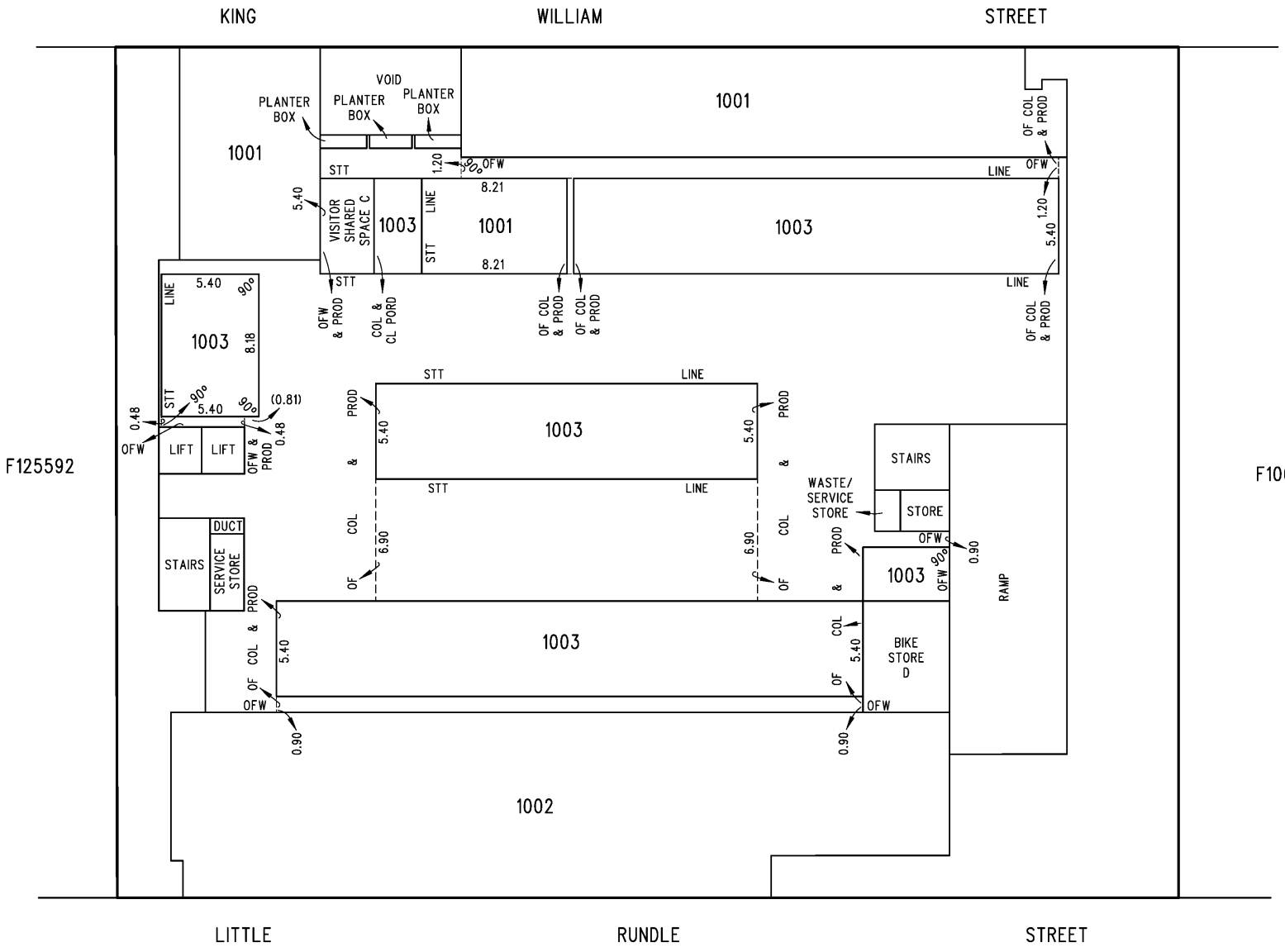

LEVEL TWO - FIRST FLOOR

0 2.5 5 7.5 10 12.5

SCALE - METRES

JOHN C BESTED & ASSOC PTY LTD
ABN 96 004 596 908
SURVEYING & PLANNING CONSULTANTS
362 MAGILL ROAD KENSINGTON PARK 5068
PHONE (08) 8332 7111 FAX (08) 8364 1829
email surveyors@johnbested.com.au

REF	DRAWING	VERSION
17160.3	17160.3-COM	7

C41143

SHEET 6 OF 9

58767_pland_5_V02_Version_4

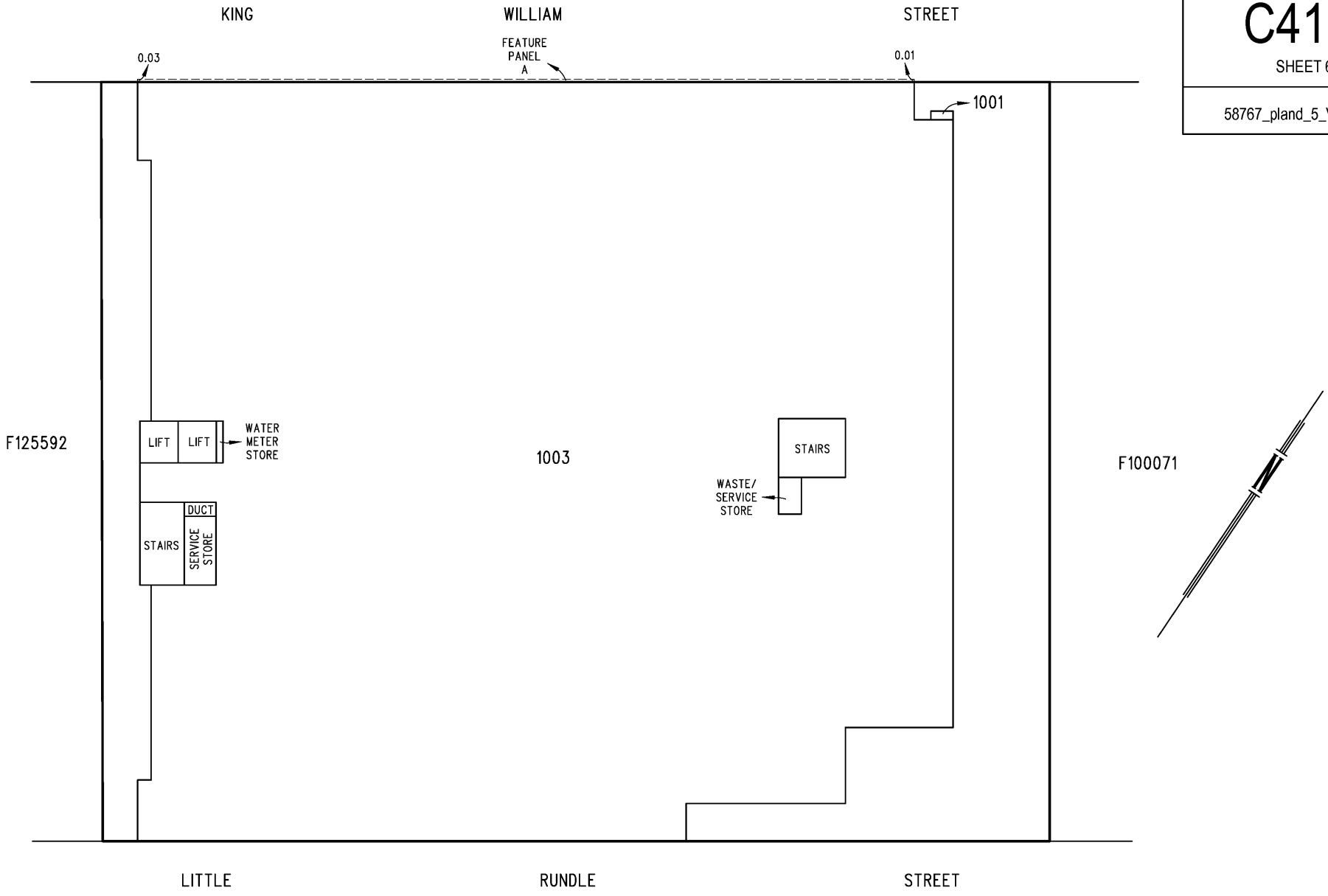

LEVEL THREE - SECOND FLOOR

0 2.5 5 7.5 10 12.5

SCALE - METRES

JOHN C BESTED & ASSOC PTY LTD
ABN 96 004 596 908
SURVEYING & PLANNING CONSULTANTS
362 MAGILL ROAD KENSINGTON PARK 5068
PHONE (08) 8332 7111 FAX (08) 8364 1829
email surveyors@johnbested.com.au

REF	DRAWING	VERSION
17160.3	17160.3-COM	7

C41143

SHEET 7 OF 9

58767_pland_6_V02_Version_4

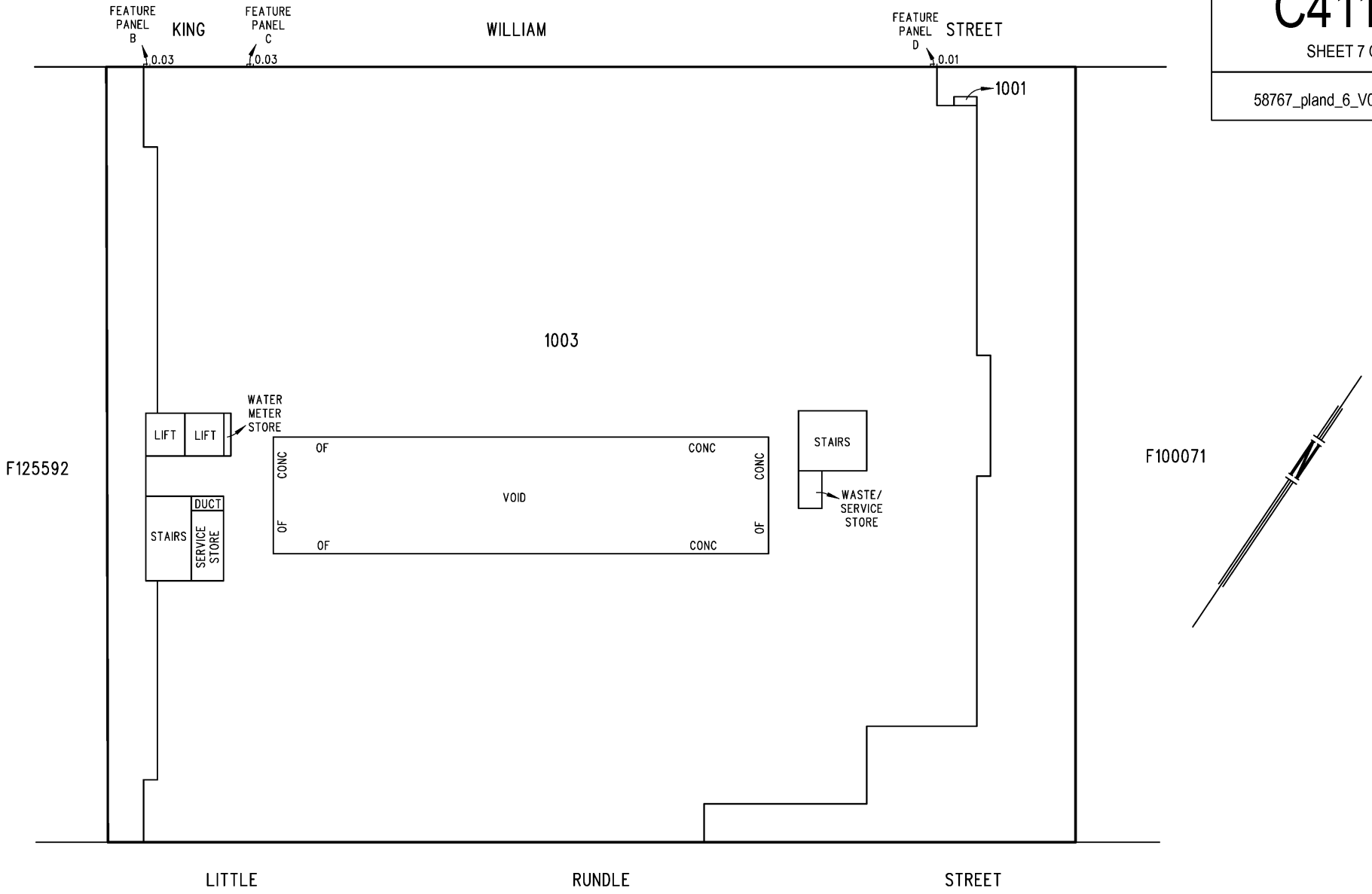

LEVEL FOUR - THIRD FLOOR

0 2.5 5 7.5 10 12.5

SCALE - METRES

JOHN C BESTED & ASSOC PTY LTD

ABN 96 004 596 908

SURVEYING & PLANNING CONSULTANTS

362 MAGILL ROAD KENSINGTON PARK 5068

PHONE (08) 8332 7111 FAX (08) 8364 1829

email surveyors@johnbested.com.au

REF	DRAWING	VERSION
17160.3	17160.3-COM	7

C41143

SHEET 8 OF 9

58767_pland_7_V02_Version_4

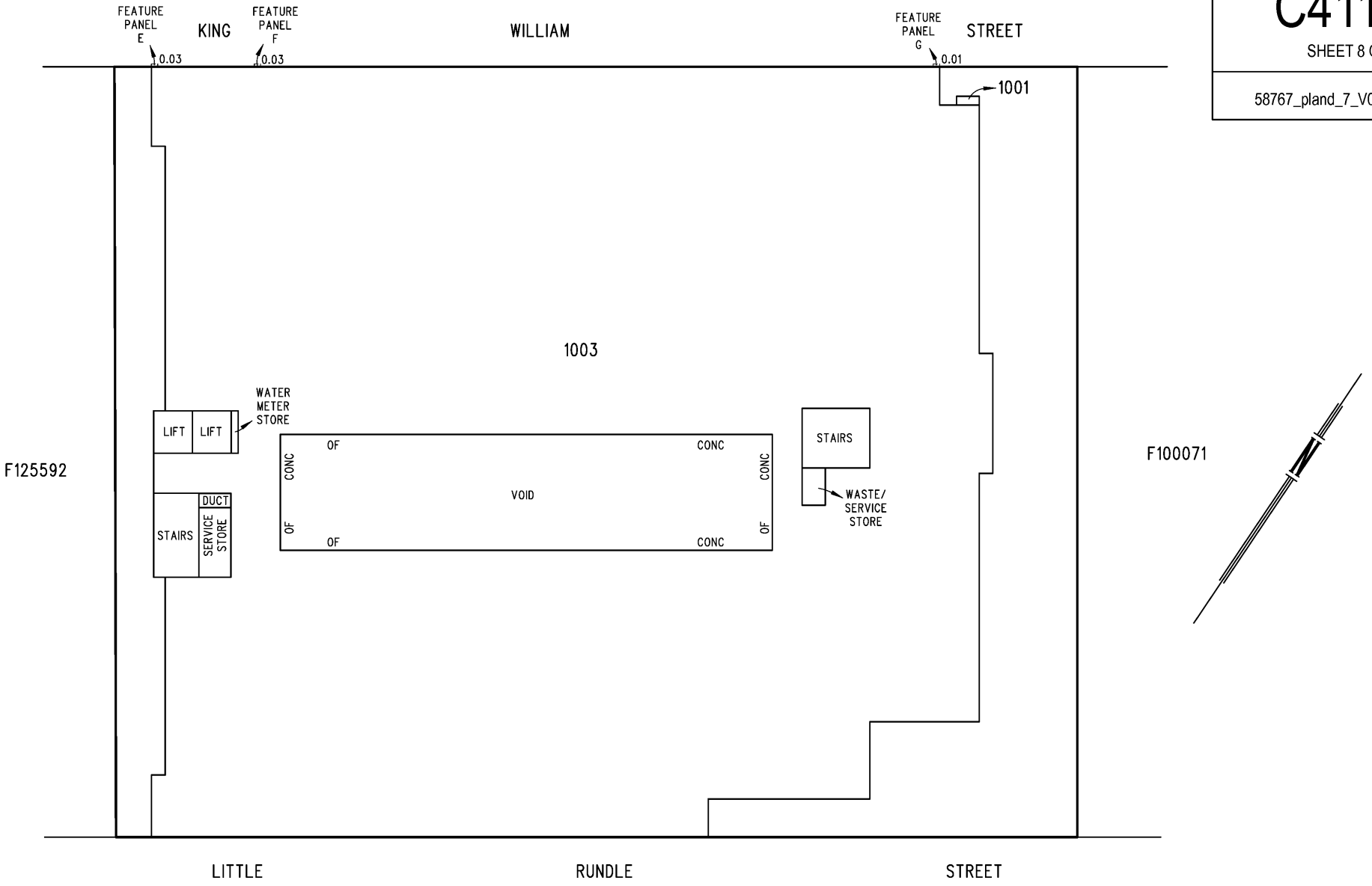

LEVEL FIVE - FOURTH FLOOR

0 2.5 5 7.5 10 12.5

SCALE - METRES

JOHN C BESTED & ASSOC PTY LTD

ABN 96 004 596 908

SURVEYING & PLANNING CONSULTANTS

362 MAGILL ROAD KENSINGTON PARK 5068

PHONE (08) 8332 7111 FAX (08) 8364 1829

email surveyors@johnbested.com.au

REF	DRAWING	VERSION
17160.3	17160.3-COM	7

C41143

SHEET 9 OF 9

58767_pland_8_V02_Version_4

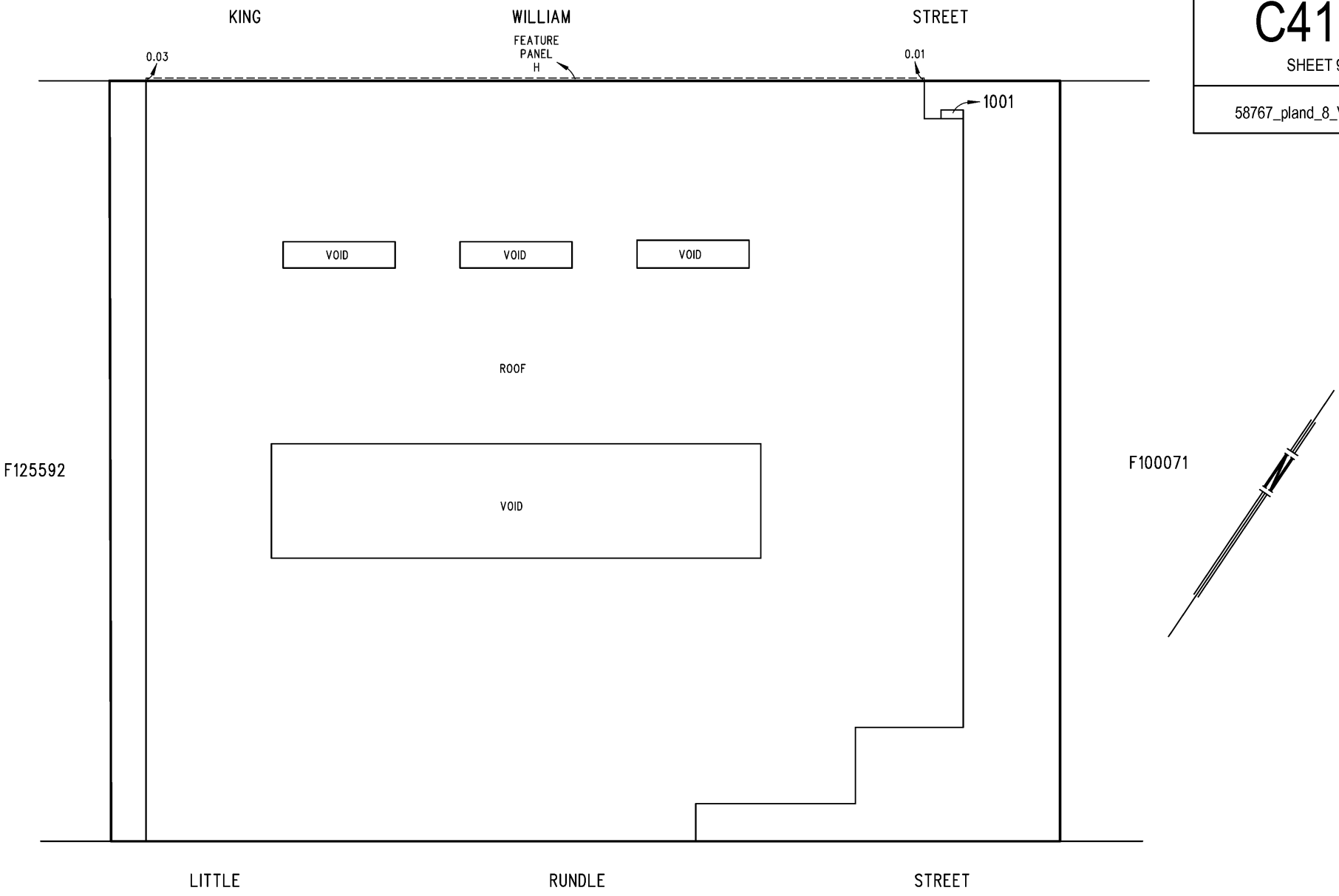

ROOF PLAN

0 2.5 5 7.5 10 12.5

SCALE - METRES

JOHN C BESTED & ASSOC PTY LTD

ABN 96 004 596 908

SURVEYING & PLANNING CONSULTANTS

362 MAGILL ROAD KENSINGTON PARK 5068

PHONE (08) 8332 7111 FAX (08) 8364 1829

email surveyors@johnbested.com.au

REF	DRAWING	VERSION
17160.3	17160.3-COM	7

LOT ENTITLEMENT SHEET

SCHEDULE OF LOT ENTITLEMENTS		
LOT	**LOT ENTITLEMENT**	**SUBDIVIDED**
1001	1,075	
1002	1,140	
1003	7,785	
AGGREGATE	**10,000**	

COMMUNITY PLAN NUMBER

C41143

SHEET 1 OF 1

ACCEPTED

Mark Mitchell 13/11/2017

PRO REGISTRAR-GENERAL

DEV. No. 155/C025/17

CERTIFICATE OF LAND VALUER

I ***Zac Vartuli***

being a land valuer within the meaning of the Land Valuers Act 1996 certify that the schedule is correct for the purposes of the Community Titles Act 1996

Dated the 27th day of September 2017

Signature of Land Valuer

Residential Tenancy Agreement - Fixed Term or Periodic

***Residential Tenancies Act 1995* (SA)**
***Residential Tenancies Regulations 2010 (*SA)**

- This is your residential tenancy agreement. It is a binding contract under the ***Residential Tenancies Act 1995* (SA)** (**Act**).
- Parts C, Part A, Part B and Part D contain the terms of your agreement.
- All parties to this agreement should consider obtaining legal advice about their rights and obligations.

PART A – BASIC TERMS

This agreement is between the Landlord(s) and the Tenant(s) listed on this form.

1. Date of agreement

This is the date the agreement is signed: 14/03/2025

If the agreement is signed by the parties on different days, the date of the agreement is the date the last person signs the agreement.

2. Premises let by the Landlord

Address of premises

Street: 23/58 King William St

Suburb: Kent Town State: SA Postcode: 5067

Reservations

Detail any part of the premises excluded from this agreement or reserved for the Landlord's sole use or use in common with the Tenant:

3. Landlord's details

Full name or company name: Anna Segreto and Darren Keegan

ABN/ACN (if applicable):

Address of registered office (if landlord is a company)

Address: 27 PARKWAY AVENUE

Suburb: MOUNT GAMBIER State: SA Postcode: 5290

Address for service of documents (must not be the agent's address)

Address:

Suburb: State: Postcode:

Full name or Company name:

ABN/ACN (if applicable):

Address for service of documents (must not be the agent's address)

Address:

Suburb: State: Postcode:

Landlord's agent's details

Company name: Klemich Property Management Pty Ltd

Trading name: Klemich Property Management Pty Ltd

Agent name: Martina Claus

Address: 1/245 Fullarton Rd

EASTWOOD State: SA Postcode: 5063

Phone number: 0400 155 596 ABN/ACN (if applicable): 27 644 615 798

Email address: martina@klemich.com.au

Registration number (RLA): 307834

Note: The Landlord must notify the Tenant within 14 days if any of this information changes.

Details of any person with superior title to the Landlord

Full name:

Address:

State: Postcode:

© copyright 2024 Forms Live

4. Tenant details

Each Tenant that is a party to the agreement must provide their details here.

Full name of **Tenant 1**: Om Prasad Dash
Phone number: 0468 580 401 ABN/ACN:
Email for service of notices or documents: omprasad.dash@gmail.com

Full name of **Tenant 2**: Rinita Shadangi
Phone number: 0468 616 730
Email for service of notices or documents: annie.dash88@gmail.com

Full name of **Tenant 3**:
Phone number:
Email for service of notices or documents:

Full name of **Tenant 4**:
Phone number:
Email for service of notices or documents:

Note: If there are more than four tenants, include details on an extra page.

5. Length of the agreement

☑ Fixed term agreement — 12 months

Start date: 24 / 03 / 2025

(this is the date the agreement starts and you may move in)

End date: 23 / 03 / 2026

Note: If the term is 90 days or less, include a Short Fixed Term Tenancies Notice (Form 1).

☐ Periodic agreement (monthly) Start date:

Note: A periodic (e.g. month by month) tenancy agreement will be formed at the end of the fixed term agreement if the Landlord and Tenant do not sign a new fixed term agreement and the Tenant stays in the property.

6. Rent

Rent amount ($) (payable in advance) $700 per week

To be paid per ☐ week ☑ fortnight ☐ calendar month

Day rent is to be paid every second Monday
(e.g. each Thursday or the 11th of each month)

Date first rent payment due: 24 / 03 / 2025

Does a rent control notice apply in respect of the premises? ☐ Yes ☑ No

7. Bond

The maximum bond is:

(a) if the rent is less than $800 per week – four weeks' rent; or

(b) if the rent is more than $800 per week – six weeks' rent.

Bond amount ($): $2800

Date bond payment due: 24 March 2025

8. Domestic appliances requiring instructions

(List the appliances here. Manufacturers manuals, or written or oral instructions must be provided to the Tenant.)

as supplied by owner/agent

© copyright 2024 Forms Live

9. Details of embedded electricity network

Is electricity supplied to the premises via a connection point that is part of an embedded network? ☐ Yes ☑ No

If yes, the Landlord must provide the following information –

(a) General information about the nature, benefits and potential consequences of participating in an embedded network:

(b) Details of the retailer for the embedded network

Name: _____ ABN: _____

Phone: _____ Email: _____

Website: _____

Tariffs that apply: _____

(c) Metering arrangements and potential costs of participating in the embedded network:

(d) Cost apportionments per kilowatt hour for any bundled utilities arising from participation in the embedded network:

10. Method of rent payment

(Landlord to tick available methods of rent payment. At least one method must be electronic.)

☑ direct deposit ☐ bank deposit ☐ cash ☐ cheque or money order ☐ PAY

☐ other electronic form of payment _____

Payment details (if applicable): _____

BSB no. 065-000 Account no. 12779059

Account name Klemich Property Management Trust Account

Payment reference 100197

11. Water consumption

The Tenant is required to pay water charges as detailed and as allowed under the Act:

☑ All water use and supply charges ☐ Water use only ☐ Supply charge only

☐ All water usage over and above _____ kL per _____ ☐ No charge for water

☐ Other *(specify)*

12. Utilities

The following utilities/services are separately metered or supplied to the premises and the Tenant will pay rates and charges as consumed:

☑ electricity ☐ other: _____

☑ gas ☐ other: _____

☑ water ☐ other: _____

The following utilities/services are not separately metered or supplied to the premises and the Tenant will pay a portion of the rates and charges using the following method of apportionment:

Service	Apportionment
SA Water	usage is group share = divided by numbers of units in building

© copyright 2024 Forms Live

13. Inspection sheet

The Landlord or Landlord's agent must give each Tenant a signed copy of the inspection sheet at the time the Tenant commences occupation of the premises.

(Landlord (or landlord's agent) to tick as appropriate)

- ☐ The inspection sheet has been provided.
- ☑ The inspection sheet will be provided to the Tenant on or before the date the agreement starts.

14. Notice of Landlord's intention to offer premises for sale

The Landlord has advertised or intends to advertise the premises for sale or has entered into a sales agency agreement for the sale of the premises: ☐ Yes ☑ No

© copyright 2024 Forms Live

1. Residential Tenancies Act 1995

1.1 This agreement is subject to the *Residential Tenancies Act 1995* (SA) (**Act**) and *Residential Tenancies Regulations 2010* (SA) (**Regulations**).

1.2 If there is any inconsistency between a provision of this agreement and the Act or Regulations, unless the Act or Regulations permit otherwise, the Act or Regulations will prevail to the extent of the inconsistency.

2. Rent

2.1 The Tenant must pay the rent at the times and in the manner set out in Part A of this agreement.

2.2 The Landlord must give the Tenant written notice of a proposed rent increase in accordance with the Act.

2.2 Rent cannot be increased more than once every 12 months.

3. Utilities

The Tenant must pay for all services to the premises including electricity, gas, telecommunications and water (unless provided otherwise in Part A of this agreement) as consumed.

4. Tenant's obligations

The Tenant must not:

4.1 use the premises for any other use than its place of residence;

4.2 permit, cause or use the premises for any illegal or unauthorised purpose;

4.3 damage the premises or permit or allow any of its invitees to damage the premises (other than fair wear and tear);

4.4 make any modifications or alterations to the premises without the Landlord's written consent unless the modification or alterations are prescribed under the Act. The Landlord must comply with the Act in granting or refusing its consent;

4.5 use any of the Landlord's fixtures or fittings for any other use than the intended use;

4.6 cause or permit any interference, nuisance or an invasion of peace or privacy to any neighbouring premises;

4.7 park any vehicles, motorcycles, bicycles or scooters inside the premises and only park such vehicles in an area allocated specifically for the Tenant for such use or as agreed to by the Landlord;

4.8 use any machinery or equipment owned by the Landlord and left on the premises other than in accordance with the Landlord's or manufacturer's instructions;

4.9 permit any other person than the persons agreed by the Landlord to remain on the premises for more than 14 days; or

4.10 smoke or permit any invitee to smoke within the premises.

5. Condition of the premises

5.1 The Landlord:

5.1.1 must ensure that the premises comply with any minimum housing standards, and are vacant and reasonably clean when the Tenant moves in;

5.1.2 must maintain the premises and ancillary property in a reasonable state of repair having regard to their age, character and prospective life; and

5.1.3 will comply with requirements in relation to minimum efficiency standards for appliances, fittings or fixtures.

5.2 The Tenant:

5.2.1 must replace any ancillary property lost or destroyed while in the care of the Tenant;

5.2.2 must take all reasonable care not to damage the premises;

5.2.3 must promptly notify the Landlord of damage to the premises;

5.2.4 must keep the premises in a reasonably clean condition (subject to reasonable wear and tear);

5.2.5 must replace at its own cost all blown or damaged light bulbs, LED lights and fluorescent tubes throughout the tenancy and ensure that all lighting is in a working condition at the end of the tenancy;

5.2.6 must make good any damage to the premises caused by the Tenant or its invitees (other than fair wear and tear);

5.2.7 must keep the premises clear of any rubbish;

5.2.8 must dispose of rubbish in accordance with council rules/guidelines and use the appropriate bins provided by or recommended by council;

© copyright 2024 Forms Live

5.2.9 must regularly maintain the gardens (including but not limited to mowing lawns, removing weeds and watering plants, shrubs, trees and flowers) to the same standard as at the commencement of this agreement;

5.2.10 must not do anything which may damage or block any drains (including but not limited to gutters, downpipes and stormwater drains);

5.2.11 must keep the premises clean and free from mould, fungi and damp caused by the Tenant's use of the premises; and

5.2.12 must (if the premises contains a swimming pool) regularly maintain at its own cost the pool and associated equipment to the same standard as at the commencement of this agreement.

6. Repairs by Landlord

6.1 The Tenant must notify the Landlord, in writing, as soon as practicable of a defect requiring repair, including:

6.1.1 damage to the premises.

6.1.2 a breakdown of facilities, fixtures, furniture or equipment supplied by the Landlord.

6.2 The Landlord must carry out urgent repairs promptly and non-urgent repairs in a reasonable time having regard to the nature of the repair.

7. Emergency repairs

In the case of an accident or damage occurring outside of normal business hours and which may pose a risk to life, health or security of the premises, the Tenant must comply with the Landlord's agent's procedures for after-hours emergencies notified to the Tenant from time to time.

8. Alterations

8.1 The Tenant:

8.1.1 must obtain the Landlord's consent before making any alteration or addition to the premises;

8.1.2 will be responsible for the cost of the alteration or addition;

8.1.3 must, at the end of the tenancy, return the premises to its former state as if the alteration or addition had not been made (unless otherwise agreed with the Landlord);

8.1.4 may only remove a fixture the Tenant has installed if removing it would not cause damage to the premises; and

8.1.5 must repair, or compensate the Landlord for repairing, any damage caused by the Tenant in making an alteration or addition, or in removing a fixture.

8.2 The Landlord:

8.2.1 will not unreasonably withhold consent if the alteration or addition is:

(a) minor in nature;

(b) necessary to provide infrastructure of a prescribed kind;

(c) reasonable and necessary for a Tenant with a disability and would not significantly change the premises; or

(d) reasonable and necessary for a Tenant with mobility needs relating to their age and would not significantly change the premises; and

8.2.2 may refuse consent if:

(a) the alteration would significantly change the premises;

(b) the alteration would require modifications to any common areas;

(c) the alteration would result in noncompliance with any law;

(d) any action required to restore the premises would not be reasonably practicable; or

(e) a valid notice of termination has been given to the Tenant.

9. Security of premises

9.1 The Landlord will provide and maintain locks and other security devices to ensure the premises are reasonably secure.

9.2 Neither the Landlord nor the Tenant may alter, remove or add a lock or security device without the consent of the other party (other than locks on the letterbox), except in the case of domestic abuse in accordance with the Act. Consent will not be unreasonably withheld.

© copyright 2024 Forms Live

10. Access and entry

10.1 The Landlord (or Landlord's agent) may enter the premises:

10.1.1 in an emergency;

10.1.2 to collect rent by arrangement with the Tenant, if required;

10.1.3 to inspect the premises up to four times per year (provided that at least 7 days prior to an inspection, the Landlord must give written notice specifying the purpose of the entry, date and 2-hour window within which the inspection will occur);

10.1.4 to carry out garden maintenance at the request of, or by arrangement with, the Tenant or by giving notice between 7 and 14 days prior to the entry;

10.1.5 to carry out maintenance at the request of the Tenant or after giving 48 hours' notice;

10.1.6 to carry out the requirements of a housing assessment order or housing improvement order after giving 48 hours' notice;

10.1.7 to show the premises to prospective tenants during the 28 days prior to the end of the Tenancy after giving the Tenant reasonable notice;

10.1.8 to show the premises to prospective purchasers no more than twice per week, at times as arranged with the Tenant (or as ordered by the Tribunal if parties cannot agree);

10.1.9 after issuing a notice of breach, to determine if the breach has been remedied after giving the prescribed notice to the Tenant between 7 and 14 days prior to the entry;

10.1.10 for other genuine purposes with consent of the Tenant or by giving notice between 7 and 14 days prior to the entry; and

10.1.11 if the premises have been abandoned.

10.2 The Tenant:

10.2.1 must allow entry to the premises where the Landlord has followed proper procedure; and

10.2.2 may request to be present when the Landlord or agent is at the premises and reasonable efforts will be made to accommodate the request.

11. Pets

11.1 The Tenant must apply to the Landlord for approval to keep a pet on the premises (other than an exempt animal under the Act).

11.2 The Landlord may:

11.2.1 refuse the application on the grounds specified in the Act;

11.2.2 give approval subject to conditions; and

11.2.3 impose, vary or revoke a condition of approval at any time by giving notice to the Tenant.

12. Assignment or sub-letting

12.1 The Tenant must not assign (transfer to another person) or sub-let the whole or any part of the premises without the written consent of the Landlord.

12.2 The Landlord may give the Tenant notice to vacate if the Tenant assigns or sub-lets the premises without consent.

12.3 The Landlord:

12.3.1 cannot unreasonably withhold consent to sub-let the premises.

12.3.2 must not demand or receive a fee or payment for consent (but may recover expenses reasonably incurred by the Landlord because of the assignment or subletting).

13. Landlord's obligations

The Landlord will:

13.1 if the Landlord determines to sell the premises:

13.1.1 give the tenant written notice of the Landlord's intention to sell the premises within 14 days of entering into a sales agency agreement or determining to make the premises available for inspection by prospective purchasers;

13.1.2 will not advertise the premises for sale or make the premises available for inspection by prospective purchasers until 14 days after the Tenant is notified; and

13.1.3 if a contract is entered into for the sale, will notify the Tenant of the name of the purchaser and the date from which rent is to be paid to them;

13.2 bear all statutory charges in respect of the premises; and

13.3 allow the Tenant quiet enjoyment of the premises without interference by the Landlord.

© copyright 2024 Forms Live

14. Insurance

14.1 The Landlord will insure the premises.

14.2 In relation to insurance policies taken out by the Landlord in respect of the premises, the Tenant must not do any act or omission which would make an insurance policy invalid.

14.3 The Tenant acknowledges that it will be responsible to insure its contents (at its own cost).

15. Strata or Community Title

15.1 If the premises are part of a strata scheme under the *Strata Titles Act 1988* (SA) or a community scheme under the *Community Titles Act 1996* (SA) the Landlord must give the Tenant a copy of the articles or by-laws of the strata scheme or community scheme at the commencement of the tenancy.

15.2 The Tenant must comply with the articles or by-laws at all times during the tenancy.

16. Termination

Subject to the Act and without limiting any other rights of termination the Landlord or Tenant may have under the Act:

16.1 **Termination at end of fixed term**

16.1.1 If this agreement is a fixed term agreement the Landlord may terminate this agreement at the expiry of the fixed term by providing at least 60 days' notice to the Tenant (subject to any requirements of the Regulations).

16.1.2 If this agreement is a fixed term agreement the Tenant may terminate this agreement at the expiry of the fixed term by providing at least 28 days' notice to the Landlord.

16.1.3 If this agreement is not terminated by either party, it continues as a periodic tenancy otherwise on the terms of this agreement until terminated by either party.

16.2 **Termination by Landlord for failure to pay rent**

If the rent is overdue by at least 14 days, the Landlord may issue the Tenant with a notice of termination for breach.

16.3 **Termination by either party for breach**

If either party breaches this agreement (and that breach is capable of being remedied), the other party may issue a notice of breach detailing the breach and that if the breach is not remedied within the time specified (being not less than seven days) the tenancy will end. If the breach is not remedied within the time specified in the notice, the tenancy will end on the date specified in the notice.

16.4 **Reletting costs**

If the Landlord terminates this agreement before the end of the fixed term for breach by the Tenant, the Tenant will be liable to pay the Landlord's reasonable costs of reletting the premises including advertising and reletting fees.

17. End of occupancy

At the expiration or earlier determination of this agreement, the Tenant must:

17.1 deliver vacant possession of the premises to the Landlord;

17.2 deliver to the Landlord or its agent all keys and security devices;

17.3 leave the premises in the same condition (fair wear and tear excepted) as set out in the inspection sheet, including thoroughly cleaning the premises; and

17.4 remove all of the Tenant's property and belongings (including fixtures and modifications where required) from the premises and rectify any damage (at the Tenant's cost) caused by such removal.

18. Privacy

18.1 As part of the Landlord leasing the premises to the Tenant, the Tenant will be required to give the Landlord or its agent Personal Information (as defined in the *Privacy Act 1998* (Cth)).

18.2 Subject to the *Privacy Act 1998* (Cth), the Tenant consents to providing such information and permits the Landlord and/or its agent to:

18.2.1 disclose the information to third parties for the purpose of marketing and sales campaigns, for any purpose stated in the privacy statement given to the Tenant (or the privacy policy of the Landlord's agent), and for any matters, issues or disputes related to this agreement or the tenancy;

18.2.2 to keep on its database for future marketing and sales campaigns or similar (including where the Landlord is not marketing or selling a property);

18.3 If the Landlord or its agent is required to maintain a privacy policy in accordance with the *Privacy Act 1998* (Cth), upon request from the Tenant, the Landlord or its agent must provide the Tenant with a copy of its privacy policy.

© copyright 2024 Forms Live

19. Counterparts

19.1 This agreement (identical in form and context) may be executed in any number of counterparts. All counterparts together will be taken to constitute one instrument of the relevant agreement.

19.2 Each party consents to this agreement and any notices provided under this agreement being signed by any other party in accordance with an electronic communication method and being given or produced by electronic communication, including by link emailed to a party to download an electronic copy.

© copyright 2024 Forms Live

PART C - ADDITIONAL TERMS

List any additional terms to this agreement. The terms listed must not exclude, restrict or modify any of the rights and duties included in the Act or Regulations.

Note: If you need extra space, attach a separate sheet. Both the Landlord and Tenant should sign and date all attachments.

© copyright 2024 Forms Live

PART D - EXECUTION

Signatures

This agreement is made under the ***Residential Tenancies Act 1995*** **(SA)**.

Landlord

Signature of Landlord 1 (or Landlord's agent)

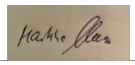

Dated 14/03/2025

Signature of Landlord 2 (or Landlord's agent)

Dated

Tenant

All Tenants listed must sign this agreement.

☑ I/we acknowledge receipt of the *Tenant Information Guide* provided by the Landlord

Signature of Tenant 1

Om Prasad Dash

Dated 13/03/2025

Signature of Tenant 2

Rivlita Shadangi

Dated 13/03/2025

Signature of Tenant 3

Dated

Signature of Tenant 4

Dated

Note: Each Tenant who is a party to the agreement must sign and date here. If there are more than four Tenants, include details on an extra page.

Any alterations to this agreement must be in writing, signed and dated by the parties.

© copyright 2024 Forms Live

Forms Live Sign
Page: 12 / 49
5b183e8f-807a-4e76-928f-3d8ca1d839b2

Tenant Information Guide

The information in this guide is a summary of the Residential Tenancies Act 1995. It has been prepared by Consumer and Business Services and gives general guidance only. It does not constitute legal advice and is not a substitute for the Residential Tenancies Act 1995.

Introduction

The *Residential Tenancies Act 1995* requires that a landlord or agent **must give the tenant this information guide** at the time that an agreement is entered into. That agreement must require the tenant to acknowledge receipt of this guide.

This guide sets out the **general rights and obligations of landlords and tenants** in respect of residential tenancy agreements entered into in South Australia.

It is inclusive of changes made to the *Residential Tenancies Act 1995* that **commenced as of 1 July 2024**. Tenancy information and forms can also be found at sa.gov.au/housing/private-rentals.



A residential tenancy agreement (sometimes called a lease) is formed when a person (landlord/agent) gives another person (tenant), the right to occupy premises in return for payment. Boarders, lodgers and rooming house residents may be treated differently.

Forms Live Sign
Page: 13 / 49
5b183e8f-807a-4e76-928f-3d8ca1d839b2

Contents

Introduction 1
The landlord/tenant relationship 4
The landlord is obliged to: 4
The tenant is obliged to: 6
Landlord's right of entry to rented premises 7
At the beginning of a tenancy 7
Tenant information 8
Residential tenancy databases 8
Types of lease agreements 9
Bonds 9
Inspection sheets 10
Rent 10
Rent in advance 10
Rent increases 10
Excessive rent increases 11
Renting with pets 11
Tenants wanting to keep a pet on a rental premises 11
Tenant obligations 11
Landlords receiving an application from a tenant 12
Reasonable conditions of approval 12
Unreasonable conditions of approval 12
If landlord refuses an application and provides a reason 13
Minor alterations and minimum standards 13
When can a landlord/agent refuse the consent for alterations? 13
Who pays for the alterations? 14
Minimum housing standards 14
Repairs and maintenance 14
Utility charges and energy efficiency 14
Water, gas and electricity charges 14
Electricity embedded networks 15
Agreements relating to installation of solar energy systems 15
Minimum efficiency standards 15
Domestic abuse protections 16
Terminating a tenancy on ground of domestic abuse 16
Changing of locks 17
Other SACAT orders relating to domestic abuse 17

Forms Live Sign
Page: 14 / 49
5b183e8f-807a-4e76-928f-3d8ca1d839b2

How to apply to SACAT 17
Your safety at a hearing 18
Assistance at the hearing 18
Terminating tenancies 18
Periodic tenancy 18
Fixed term tenancy 19
Termination for breach of agreement 20
Termination for frustrated agreement 20
Termination by tenant if premises for sale 20
Termination for undue hardship 20
Termination for requiring care 21
Keeping tenant information 21
Disclosure of personal details 21
Misleading information 21
Refund of bond 21
Where parties agree 21
Notice of claim 22
Disputed bonds 22
Unclaimed money 22
Sub-letting and assignment 23
Dispute resolution 23
SACAT hearings 23
Community housing organisations 23
More information 24
Translating and Interpreting Service 25

The landlord/tenant relationship

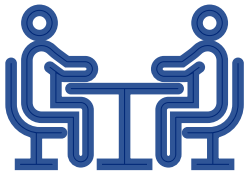

Landlords and tenants both have rights and obligations when a residential tenancy agreement is entered into. Some of these rights and obligations cannot be changed, even if there is a mutual agreement made between the parties.

This guide outlines the central rights and obligations of both parties. For full details on rights and responsibilities please refer to the *Residential Tenancies Act 1995* (the Act).

A number of penalties and expiation fees increased significantly since changes came into force on 1 March 2024. Please make yourself familiar with your obligations, rights and responsibilities, as you may be penalised for breaching your obligations.

If you have a query about your rights and obligations, contact Consumer and Business Services (CBS) on 131 882, or visit the Customer Service Centre at 4-6 Chesser Street, Adelaide.

Under a residential tenancy agreement, the landlord/tenant relationship begins when a landlord agrees to rent residential premises to a tenant. “Premises” includes the land and buildings contained on it. A residential tenancy agreement might include a right to occupy a building (such as a studio or ‘granny flat’) located near the primary residence.

However, a landlord and tenant may agree at the beginning of the tenancy to exclude certain parts of the premises as being for the landlord’s use only.

A residential tenancy agreement can be written, verbal or even implied. It does not need to be in writing to be binding.

If parties wish to enter into a written residential tenancy agreement, examples of standard agreements or a copy of a standard lease agreement is available for free from the CBS Customer Service Centre, or at sa.gov.au/tenancy/privaterentalforms.

The landlord is obliged to provide the tenant with a copy of this written information guide.

The landlord must pay any cost associated with the preparation of a written residential tenancy agreement. There is to be no cost to the tenant.

The landlord is obliged to:

- not invite offers for rent higher than the fixed amount in the residential tenancy agreement
- if you intend on selling the rental premises within 3 months of entering into a new residential tenancy agreement, include this fact in any advertising materials
- inform prospective tenants of any intention to sell the property and not induce a tenant into a residential tenancy agreement by concealing the fact that you intend on selling the premises within 3 months after the agreement is to be entered into
- not require prohibited information (as prescribed in the Residential Tenancies Regulations 2010) to be provided by prospective tenants or by another person

- provide the successful tenant with a written notice setting out the agent/landlord contact details (including the landlord's full name and postal or email address)
- provide existing tenants with at least 14 days' notice if the property is to be sold
- provide the tenant with a copy of the residential tenancy agreement if the landlord has required the tenant to sign a written agreement
- complete and provide a signed inspection sheet and a copy of this information guide to each tenant at the commencement of the tenancy
- provide manuals, or written, or oral instructions for the operation of domestic appliances e.g., an air conditioner. Domestic appliances requiring instructions must also be listed in the tenancy agreement
- allow the tenant to pay rent by at least one means that is electronic and does not involve the collection of rent by a third party charging a fee for the collection service or any other fees for the payment of rent
- provide the tenant with the prescribed information if electricity is supplied to the premises via a connection point that is part of an embedded network
- provide the premises in a clean and reasonable state, and ensure they comply with the minimum housing standards under the *Housing Improvement Act 2016*
- keep proper rent records and give proper receipts for any money received from the tenant. If the tenant pays rent into an account that is kept by the landlord or agent at a financial institution and the landlord or agent keeps a written record containing the information normally required on a receipt, a receipt does not have to be given to the tenant
- pay rates and charges for the supply of water, electricity and gas as agreed between the landlord and the tenant. In the absence of an agreement, separately metered services' rates and charges for the supply of water, electricity and gas are to be borne by the tenant, based on the level of consumption. If rates and charges are not based on consumption, they are to be borne by the landlord. The landlord is obliged to the pay rates and charges if they fail to provide a copy of the invoice within 30 days of being issued the invoice by the supplier.
- pay for excessive water usage charges and fault diagnosis charges caused by a fault in water infrastructure, equipment or appliances, fixtures or fittings if they were notified by a tenant of the excessive usage charges as soon as practicable, and the fault wasn't caused by the tenant (unless it involves SA Water property)
- pay an amount in relation to the costs and charges for the installation of a solar energy system for the premises, as agreed with the tenant
- pay council rates, land tax charges, sewerage charges and any levies
- maintain and repair the premises (having regard to their age, character and prospective life), including carrying our urgent repairs to ensure the premises comply with the minimum housing standards
- ensure any appliances, fittings or fixtures installed or replaced comply with the minimum energy and water efficiency standards as prescribed in the Residential Tenancies Regulations 2010
- provide notice to the tenant that the premises will be tested for contamination if the landlord becomes aware that drug related conduct (manufacture, smoking, consumption or administration of a controlled drug, other than conduct constituting a simple cannabis offence under the Controlled Substances Act 1984) has occurred on the premises
- ensure drug contamination is remediated as soon as is reasonably practicable if testing shows drug contamination, such that the premises comply with the minimum housing standards

- allow the tenant peace, comfort and privacy
- not unreasonably withhold consent to alterations or additions to the premises that are minor or are necessary for a tenant with a disability or with mobility access needs (that do not significantly affect the structure of the premises)
- provide and maintain locks to ensure the premises are reasonably secure
- provide reasons for termination
- not let the premises to another person before the end of 6 months after terminating a tenancy on the grounds of obtaining possession of the premises for their own or family member's occupation, requiring the premises for demolition, repairs or renovations, or have entered into a contract for the sale of the premises.

The tenant is obliged to:

- not provide the landlord with false information about the tenant's identity or place of occupation
- pay the rent on time. If the tenant receives a Centrelink payment, the landlord may agree for the rent to be paid using Centrepay. (For details on Centrepay contact your nearest Centrelink Office.) If rent is paid electronically, it will be taken to be paid on the date the money is received in the landlord's account
- keep the premises in a reasonable state of cleanliness
- pay rates and charges for the supply of water, electricity and gas as agreed between the landlord and the tenant. In the absence of an agreement:
    - separately metered services' rates and charges for the supply of water, electricity and gas are to be borne by the tenant, based on the level of consumption
    - if rates and charges are not based on consumption, they are to be borne by the landlord
    - sewerage charges and any levies are always the responsibility of the landlord
- pay an amount in relation to the costs and charges for the installation of a solar energy system for the premises, as agreed with the landlord
- not intentionally or negligently cause or allow damage to be caused to the premises
- notify the landlord of damage to the premises
- notify the landlord when repairs are needed or if excessive water usage charges are the result of a fault in water infrastructure, equipment or appliances, fixtures or fittings
- not use the premises, or allow them to be used, for any illegal purpose
- not cause or allow a nuisance or interference with the reasonable peace, comfort and privacy of anyone else living in the immediate vicinity of the premises
- not make alterations to the premises (including picture hooks, shelves and fences) without the landlord's consent
- pay for any alterations or additions made by the tenant and return the premises to its former state at the end of the tenancy
- only alter the locks or security device on the premises without the landlord's consent if a tenant has been excluded from the rental premises due to an intervention order, and the protected person is a co-tenant or has been living at the premises. Keys to the new lock or security device and certified copies of the relevant order must be given to the landlord/agent and other co-tenants (not including the co-tenant who is the subject of the relevant order) as soon as is practicable

- not keep a pet on the premises without the landlord's approval.

Landlord's right of entry to rented premises

A landlord can enter rented premises:

- in an emergency
- at a time previously arranged with the tenant, but not more often than once every week to collect rent
- to inspect the premises not more than 4 times a year (unless the Tribunal orders otherwise) after giving 7 to 28 days' written notice specifying the date, purpose of entry and an entry period of up to 2 hours
- to carry out garden maintenance at the request of the tenant, or at a time previously arranged with the tenant no more than 7 days before the day of entry, or after giving 7 to 14 days' written notice
- to carry out necessary repairs (other than in an emergency) or maintenance (other than garden maintenance) at the request of the tenant or after giving at least 48 hours' notice
- to show the premises to prospective tenants at the request of the tenant, or after giving reasonable notice to the tenant during the last 28 days of a tenancy
- at a time agreed by the tenant within normal hours, or as ordered by the Tribunal (if the Tribunal is satisfied that the tenant is unreasonably withholding their agreement), to show the premises to prospective purchasers no more than twice weekly (however 7 days' notice must be given if photographs or video recordings are to be produced during the visit and a tenant's written consent must be provided prior to any of their personal possessions being recorded)
- to determine whether a breach has been remedied after the landlord has given the tenant notice of a breach of the residential tenancy agreement. No less than 7 and no more than 14 days' written notice on a required form must be given
- if it is believed on a reasonable ground that the tenant has abandoned the premises
- for some other genuine purpose after giving 7 to 14 days' written notice specifying the date, time and purpose of entry, or with the consent of the tenant.

All entries by the landlord, or organised by the landlord, must take place between normal hours, unless agreed.

That is, 8am to 8pm on any day other than a Sunday or public holiday.

At the beginning of a tenancy

A landlord has the right to choose a suitable tenant. However, a person must not receive a payment from a prospective tenant to aid in their assessment or in their rating for suitability as a tenant. There are categories of information that landlords (excluding NRAS and NDIS landlords, registered community housing providers and registered charities) **must not request** from prospective tenants, or another person, as prescribed in the Residential Tenancies Regulations 2010. This includes:

- if the prospective tenant has taken legal action or been a party to a residential tenancy dispute
- if the prospective tenant has previously received a termination notice for breaching a tenancy agreement
- if the prospective tenant intends on applying for a bond guarantee

- the prospective tenant's bond history
- if the prospective tenant has lived in South Australia Housing Trust housing
- bank/financial statements of the prospective tenant unless the outgoing transactions and bank account number are redacted/omitted
- financial information relating to bankruptcy or any other financial information unless directly relating to the prospective tenant's financial capacity (i.e., not based on expenditure records)
- employment information other than a payslip or document confirming employment
- information relating to a prospective tenant's attribute or circumstance that would amount to unlawful discrimination of a kind referred to in the *Equal Opportunity Act 1984*
- the prospective tenant's medical records
- social media information relating to the prospective tenant
- the prospective tenant's vehicle's registration number
- the prospective tenant's pet's microchip number
- the level of education of the prospective tenant and the reason for their rental application.

A prospective tenant cannot be required to provide:

- more than 2 documents identifying their identity; or
- more than 2 documents relating to their ability to pay rent; or
- more than 2 documents relating to their suitability to enter into the residential tenancy agreement.

Under the Act, it is illegal to discriminate against tenants with children. This does not apply if the landlord or agent lives in the premises the tenancy relates to.

Other laws against discrimination also exist under the *Equal Opportunity Act 1984*. For information about discrimination laws visit the Equal Opportunity Commission's website at www.equalopportunity.sa.gov.au.

Tenant information



A person who holds tenant or prospective tenant personal information must take reasonable steps to protect the information from misuse, loss and from unauthorised access and disclosure. Information received about prospective tenants must be destroyed within 30 days of the successful tenant entering into a tenancy or, if the prospective tenant consents, within 6 months. **A tenant's personal information must be destroyed within 3 years after the tenancy has ended.**

Residential tenancy databases

A Residential Tenancy Database (RTD) is a commercial database containing information about tenancies, to be used by landlords when deciding whether to enter into a residential tenancy agreement with a person, not a database kept by an entity (such as a government department) for use of its officers, employees or agents.



A landlord or agent must tell a prospective tenant if they intend to use the services of a RTD to decide whether a residential tenancy agreement should be entered into. They must also tell the prospective tenant if they find that an RTD contains information about them and how the tenant can have the information amended or

removed. A landlord (or agent or database operator) must not charge a tenant a fee for giving personal information relating to them.

A landlord or agent must not list information on an RTD unless the tenant is given at least 14 days to review this information. A listing must be removed after 3 years.

Types of lease agreements

There are two types of residential tenancy agreements:



1. Periodic - an agreement (written, verbal or implied) for an indefinite period until it is lawfully terminated
2. Fixed term - a specific start date and end date agreed upon at the beginning of the tenancy (e.g., 6 or 12 months).

The landlord and tenant's rights and obligations under both types of agreements are exactly the same. There are differences, however, in the conditions of termination.

A landlord must keep a copy of a written residential tenancy agreement and any variation of the agreement (in paper or electronic form) for 2 years after the tenancy has ended.

Bonds

For rental properties where the rent payable is $800 per week and under, the landlord cannot ask for a bond that is more than 4 weeks' rent.

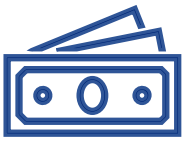

For rent over $800 per week, a landlord cannot ask for a bond that is more than 6 weeks' rent.

Money received as a bond must be receipted within 48 hours. The receipt must show the date, the person's name, the amount and address of the premises for which the bond has been paid. All bonds (including any part payments) must be lodged with CBS within two weeks (or in the case of registered land agents, four weeks) of receipt.

The bond may be lodged directly online through CBS' Residential Bonds Online (RBO) system following the advice about lodging a bond at sa.gov.au/residentialbonds. Alternative lodgement options are also listed, along with information about managing a bond. If a bond is lodged directly by tenants, CBS will notify the landlord or agent of the receipt of the bond and information about the amount received, the date it was received, the name of the tenant and the address of the rental premises.

A bond may be increased if at least 2 years have passed since the bond was paid or last increased. Where a bond is increased, the increase must be lodged with CBS within the required timeframe.

SA Housing Authority issue bond guarantees to approved tenants; this guarantee is used in the same way as a cash bond and provides the same security for landlords. Bond guarantees do not become valid until they have been lodged with CBS and have received a lodgement number.

SA Housing Authority will cancel a bond guarantee if it is not lodged with CBS by the 'lodge by' date shown on the front of the form. Whether or not a bond is paid, the Act applies to all residential tenancy agreements in South Australia.

Inspection sheets

At the beginning of the tenancy the landlord is required to provide each tenant with a signed inspection sheet, which must include comprehensive details of fixtures, furniture and other contents in the premises and their condition at the commencement of the tenancy.



After the inspection sheet has been completed and signed by the tenant, the tenant must be given a copy. The inspection sheet may be adapted to suit particular premises.

Care should be taken when completing these forms, as they may be called upon in the event of a dispute or for repayment of the bond at the end of the tenancy.

Inspection sheets should be kept throughout the tenancy. Care should be taken so that they are not lost or destroyed.

Rent

Rent in advance

Besides paying a bond at the beginning of the tenancy, a tenant can be required to pay the first 2 weeks rent. If 2 weeks' rent is paid at the start of the tenancy, no rent is due until those 2 weeks have passed. Besides a bond and 2 weeks' rent, the landlord cannot ask for any other money at the start of the tenancy.

Rent increases

The landlord may increase the rent under the following circumstances:

Where there is a fixed term agreement

- the rent cannot be increased during the term, unless the agreement includes a condition that specifically provides for an increase in rent and indicates how any rent increase will be calculated (e.g., in accordance with CPI)
- if the agreement provides for an increase, the rent can be increased after giving at least 60 days' written notice, specifying the amount of the increase and the date on which the increase is to commence
- however, the date fixed for an increase must be at least 12 months after the commencement of the agreement or, at least 12 months since the last increase in rent (even if the increase is agreed between the landlord and tenant).

Where there is a periodic agreement

- the rent can be increased after giving at least 60 days' written notice, specifying the amount of the increase and the date on which the increase is to commence
- however, the date fixed for an increase must be at least 12 months after the commencement of the agreement or, at least 12 months since the last increase in rent (even if the increase is agreed between the landlord and tenant).

Where specific rent increases are set out in the agreement and the dates on which the increases will occur are clearly defined, 60 days written notice is not required.

Excessive rent increases

An application may be made to the South Australian Civil and Administrative Tribunal (SACAT) if the tenant believes the rent payable is excessive. If the application is made due to an increase in the rent amount, the application must be made within 90 days after the notice of increased rent is given to the tenant. SACAT may take into account relevant matters, including:

- the level of rents for comparable premises in similar localities
- the estimated capital value of the premises
- any outgoings or services that landlords or tenants are liable for under the residential tenancy agreement
- the state of repair and condition of the premises
- whether the tenant was put under undue pressure to agree to the increase
- whether the rent increase was disproportionate considering the amount payable.

Renting with pets

Tenants applying to keep a pet in a rental premises can no longer have their application refused unless the refusal is based on a ground listed in the *Residential Tenancies Act 1995* (the Act).

A landlord can no longer simply state ‘no pets allowed’ and can’t charge a separate pet bond.

But a landlord can impose reasonable conditions having regard to the type of pet and nature of the premises.

Tenants wanting to keep a pet on a rental premises

During, or when applying for, a residential tenancy, a tenant can seek approval to keep a pet at the rental premises by completing an Application for approval to keep a pet on rental premises form and sending it to the landlord. The tenant may like to include the pet’s details as suggested in our Applying to rent with pets resume example.

A tenant must seek written approval from the landlord to keep a pet. It is a potential ground for termination if a pet, other than an exempt pet, is kept at the rental premises without the landlord’s approval.

Keep in mind that local council laws may limit the number or types of animals that can be kept at the premises.

Also, it’s important to note, strata or community title premises, rooming houses and residential parks are governed by their own by-laws or rules which occupants will be required to follow.

Tenant obligations

If granted approval to keep a pet on a rental premises the tenant will be:

- responsible for any nuisance or interference with the reasonable peace, comfort or privacy of others who reside in the immediate vicinity
- responsible for keeping the premises and ancillary property (meaning associated property provided by the landlord) in a reasonable state of cleanliness and must replace or compensate

the landlord for the reasonable cost of replacing any associated property lost or destroyed while in the care of a tenant
- required to notify the landlord of damage to the premises or associated property
- required to give the premises and associated property back to the landlord in reasonable condition at the end of the tenancy
- liable for compensation to the landlord if they reasonably incur costs and expenses as a direct consequence of a tenant being at fault in connection with the residential tenancy agreement.

A landlord can, by giving written notice to the tenant, impose, revoke or vary a condition of approval at any time.

Landlords receiving an application from a tenant

A tenant's application to keep a pet will be submitted to the landlord/agent using the Application for approval to keep a pet on rental premises form, stating the type and details of the pet they are applying to keep in the rental premises for the landlord's consideration. **The landlord must respond in writing to the request within 14 days of receiving it.**

A Notice of response to pet application form contains a response section to assist landlords structure a compliant response.

The response must include these key pieces of information:

- whether the landlord approves or refuses the tenant's application
- if there are conditions for approval, clearly stated reasonable conditions
- if refusing the application, the grounds for refusal and the reasons that the grounds for refusal apply to the application.

Important: If the landlord doesn't respond to the request in writing within 14 days, or if the response doesn't comply with legal requirements (providing approved reasons for the refusal or reasons for the conditions of approval) the tenant's request will be taken as approved.

Reasonable conditions of approval

A landlord can provide unconditional approval. Alternatively, the landlord can impose reasonable conditions based on the type of pet and nature of the premises which include requiring:

- the pet to be kept outside of the rental premises, if the pet is not a type of pet ordinarily kept inside
- the pet to be effectively restrained while a landlord or agent is entering or is at the premises
- carpets to be cleaned to a professional standard at the end of the tenancy if the pet is allowed inside the premises.

Unreasonable conditions of approval

Conditional approval should relate only to the tenant keeping the pet on the premises and their suitability for the environment they will be kept in.

Conditions that contravene other rights and responsibilities or constitute an offence as outlined in the Act aren't permitted. A landlord can't ask the tenant to:

- agree to buy goods or services from the landlord, a specific person or business
- pay the landlord an incentive

Forms Live Sign
Page: 24 / 49
5b183e8f-807a-4e76-928f-3d8ca1d839b2

- pay penalties or a pre-agreed amount for damages
- pay a higher rent or rental bond
- provide any form of security.

If landlord refuses an application and provides a reason

Under the Act, a landlord can only refuse a tenant's request to keep a pet at the rental premises based on any of the following grounds:

- Keeping the pet would exceed a reasonable number of animals being kept on the premises.
- The premises are unsuitable for keeping the pet because of a lack of appropriate fencing, open space or another item necessary to humanely accommodate the pet.
- Keeping the pet would pose an unacceptable risk to the health or safety of a person, including, for example, because the pet is venomous.
- Keeping the pet would contravene a law, a by-law (that is by local council) or rule applying to the premises.
- The tenant has not agreed to the reasonable conditions proposed by the landlord for approval to keep the pet.
- The animal stated in the request is not a pet.
- If the premises is a moveable dwelling, and keeping the pet would contravene a condition of a licence applying to the premises.

Minor alterations and minimum standards

The tenant can ask the landlord or agent for permission to make minor alterations or safety modifications to the premises as long as they don't significantly affect its structure.

A landlord/agent can't unreasonably withhold consent to alterations or additions to the premises that relate to:

- minor alterations or additions
- reasonable changes necessary for disability assistance
- reasonable changes necessary for mobility or access needs relating to age.

Requests to the landlord/agent should detail:

- the nature of the alterations and modifications
- information on how the property can be restored back to its former state at the end of the tenancy.

The landlord's/agent's consent must be given in writing.

When can a landlord/agent refuse the consent for alterations?

A landlord/agent may refuse consent if:

- a valid notice of termination has been given to the tenant (for the imminent change of possession, use or ownership of the premises)
- the alteration or addition would:
    - significantly change the premises
    - require modifications to other premises or a part of the premises that the tenant uses in common with the landlord/agent or another tenant

- result in non-compliance with another Act or law
- require work needed to restore the premises to its prior condition which is not reasonably practicable.

Who pays for the alterations?

Unless otherwise agreed between the landlord/agent and the tenant:

- the tenant must pay for any alteration or addition to the premises they have made
- at the end of the tenancy, the tenant must return the premises to its former state at their cost.

If a tenant causes damage to the premises by making an alteration or addition to the premises, or by removing a fixture, the tenant must notify the landlord/agent.

The landlord/agent can decide if the tenant should repair the damage or compensate the landlord/agent for the reasonable cost of repairing the damage.

Minimum housing standards

Rental premises must comply with minimum housing standards at the beginning of a tenancy. These standards are set under the *Housing Improvement Act 2016* and the Housing Improvement Regulations 2017.

If they don't, the tenant can request the landlord/agent undertake urgent repairs to meet the standards.

During occupation, a tenant may also serve a notice of termination if the premises:

- doesn't comply with the minimum housing standards
- is destroyed totally or to an extent it's unsafe.

Repairs and maintenance

The tenant must not cause damage to the premises. If damage does occur, the landlord should be notified as soon as possible. If a tenant intentionally or carelessly causes (or allows damage to be caused) to the premises, it is the tenant's responsibility to repair the damage.

If damage or repairs are needed due to normal wear and tear, or in any way that is not the tenant's fault, the landlord should be notified immediately. The landlord is responsible to repair and maintain the premises under these circumstances. If the landlord has not attended to the repair, or if the tenant has not been able to contact the landlord, the tenant may have emergency repairs carried out by a licensed tradesperson. If this happens, the tenant must get a written report from the tradesperson.

Utility charges and energy efficiency

A landlord or their agent can't pass on statutory charges connected with a property that are for sewerage, council rates and the Emergency Services Levy. A tenant's responsibility for costs for services vary by property.

Water, gas and electricity charges

Rates and charges for water, gas and electricity are to be borne as agreed between the landlord and tenant. In the absence of an agreement, rates and charges based on the level of consumption are to

be borne by the tenant. However, if the consumption is not separately metered or the rates and charges are not based on the level of consumption, landlords are responsible for the statutory charges.

If a landlord/agent fails to provide a copy of the invoice for any usage charges incurred by the tenant within 30 days of the issue of the invoice, the tenant is not required to pay.

The landlord will be responsible for excessive water use charges caused by a fault in water infrastructure, equipment or other appliances, fittings or fixtures on or connected to the premises – as long as the tenant has notified the landlord/agent of the excessive usage charges and any fault they've become aware of as soon as practicable. This doesn't include faults caused by the action or omission of the tenant.

The landlord will not be responsible for costs associated with a fault that is the responsibility of SA Water.

Electricity embedded networks

The landlord/agent must let tenants know if their electricity is being provided via an embedded network, including:

- information about the nature, benefits and potential consequences of participating in an embedded network generally
- the details of the retailer for the embedded network, including electricity tariffs that apply and the retailer's contact information, ABN and website address
- information about metering arrangements and potential costs of participating in the embedded network
- the cost apportionments per kilowatt hour for any bundled utilities arising from the embedded network.

Agreements relating to installation of solar energy systems

The landlord and tenant may enter into an agreement under which the tenant is liable for an amount in relation to the costs and charges for the installation of:

- a solar photovoltaic system
- a solar hot water system
- a solar battery system
- any combination of the above
- any ancillary equipment required to the above.

Minimum efficiency standards

The landlord must ensure appliances, fittings or fixtures installed or replaced comply with minimum energy and water efficiency standards.

The following fixtures must not have a flow rate that is higher than 9 litres per minute:

- shower heads
- cold water taps and single mixer taps for kitchen, laundry or bathroom sinks or hand basins.

Toilets must be dual flush and have a minimum 3-star rating in accordance with the WELS scheme as outlined in the *Water Efficiency Labelling Standards Act 2005* (Commonwealth).

Electrical appliances must have a minimum 3-star rating in accordance with the *Greenhouse and Energy Minimum Standards Act 2012* (Commonwealth) and electric or gas water heaters must also comply with that Act.

Domestic abuse protections

There are options for tenants who experience abuse or domestic violence by a person who may be:

- living in the home
- is a regular visitor.

Terminating a tenancy on ground of domestic abuse

If a tenant is experiencing domestic abuse, the tenancy may be terminated **directly, and immediately if required, with the landlord or agent** without needing to apply to the South Australian Civil and Administrative Tribunal (SACAT).

The tenant can submit **Form 15** - Notice of termination by tenant on grounds of domestic abuse, with the following as **supporting evidence**:

- a copy of an intervention order
- a signed report from an authorised professional setting out why they are of the opinion the tenant is experiencing domestic abuse.

Authorised professionals who can issue reports are:

- **legal practitioners**
- **registered medical practitioners**
- **social workers**
- **people working for domestic and family violence support services or sexual abuse support services**
- **domestic and family violence case managers.**

Any evidence provided by the tenant must be stored and disposed of securely by the landlord or agent.

The landlord or agent can only use, or disclose this evidence, without your consent to refer a matter to the police, a child protection agency, or if it is reasonably necessary for your protection.

Tenants can also give 7 days' notice to end a tenancy if they need to vacate to obtain temporary crisis accommodation. They will need to provide the name of the crisis accommodation provider. See **Form 14** - Termination by tenant where certain circumstances apply.

A tenant or co-tenant may still apply to SACAT to terminate a residential tenancy on the ground of domestic abuse under the existing provisions in the Act. SACAT must be satisfied that:

- an intervention order is in force for the protection of the applicant or applicant's domestic associate who regularly resides at the premises; or

- the person residing at the premises has committed domestic abuse against the applicant/applicant's domestic associate who regularly resides at the premises.

SACAT may also terminate a residential tenancy on application of the landlord if satisfied that:

- an intervention order is in force against a tenant for the protection of a person who regularly resides at the premises; or
- a tenant has committed domestic abuse against a person who regularly resides at the premises.

Changing of locks

A tenant or a person protected by an intervention order experiencing domestic abuse may alter any lock or security device without the permission of their landlord/agent. They must provide required evidence of the abuse and provide a key to the landlord or landlord's agent.

If there is NO intervention order in place, landlord/agent consent is required to change the locks. If the tenant believes approval is being unreasonably withheld, they can apply to SACAT for a resolution.

Other SACAT orders relating to domestic abuse

SACAT can also vary a tenancy in circumstances where domestic abuse has occurred.

- A person who is protected by an intervention order and normally lives at the rental premises, but is not listed on the tenancy agreement, can apply to SACAT for the tenancy agreement to be varied so that they can remain at the premises without the perpetrator.
- SACAT has greater authority to make decisions about whether a tenant who has experienced domestic abuse and was not responsible for damage caused by their co-tenant, should be liable to pay compensation to the landlord/agent for this damage.
- This means SACAT can refund a victim's portion of a rental bond and hold a co-tenant responsible for any damages they caused, even when the amount of compensation owed to the landlord/agent is greater than this tenant's portion of the bond.
- SACAT may make an order that a termination notice served on the tenant is invalid if the reason for termination was due to the act of a person who subjected the tenant or a domestic associate of the tenant to domestic abuse.

How to apply to SACAT

If you are a tenant or a co-tenant you can apply to SACAT for an order to:

- terminate the tenancy
- allow you to stay in the property without the perpetrator
- leave the property and terminate your responsibility under the tenancy
- stop a landlord/agent from listing your details on a Residential Tenancy Database (tenant 'blacklist') for damage caused by the perpetrator
- determine how the bond will be refunded.

All applications to SACAT are completed online at sacat.sa.gov.au. All the information you are required to provide will be contained in the online application form.

If you are unable to complete the form online, you can contact the tribunal for assistance on 1800 723 767. You can also visit SACAT's offices at Level 4 or 7, 100 Pirie Street Adelaide and use a computer at one of SACAT's public kiosks. An application fee normally applies but may be waived if you cannot pay due to your circumstances.

Your safety at a hearing

SACAT always has at least one security guard present.
The guard's role is to ensure the safety of tribunal members and people attending. The guard may walk in and out of a hearing room at any time. The guard may be present in the room if there are security concerns for a particular hearing.

Where an intervention order is in place, SACAT will usually allocate two hearing rooms, with one person in each room connected by teleconference facilities. The tribunal member may move from one room to the other to take evidence from each person.

Assistance at the hearing

You may have a family member or friend to assist you, or you may arrange for someone to advocate for you at the hearing (refer to the service providers listed below).

Terminating tenancies

The required forms, which must be used when issuing a notice of termination, are available from CBS and at sa.gov.au/tenancy/privaterentalforms.

Periodic tenancy

The tenant may give 21 days' written notice or a period equivalent to a single period of the tenancy, (whichever is the longer), to the landlord at any time.

For example, if the rent is paid weekly or fortnightly, the tenant is required to give 21 days' notice. If the rent is paid calendar monthly, the tenant would need to give a calendar months' notice.

The landlord may give 60 days' written notice of termination as follows:

- where the landlord requires possession of the premises for the landlord's own occupation, or occupation by the landlord's spouse, child or parent, or occupation by the spouse of the landlord's child or parent
- where the premises are required for demolition
- where the premises have been sold, to be given any date from the signing of the contract of sale
- where possession of the premises is required for repairs or renovations that cannot be carried out conveniently while the tenant remains in possession of the premises

A tenant may give up possession of the premises prior to the 60-day notice period if served with a termination notice on the above grounds and won't be liable to pay rent after giving 7 days' written notice.

The landlord may give 90 days' written notice of termination on one of the following grounds:

- the tenant or visitor gave rise to a serious risk to the life, health or safety of the landlord/agent or person residing nearby
- the tenant or other person residing at the premises threatened or intimidated the landlord/agent/contractor or employee of the landlord/agent
- the tenant kept a pet on the premises without authorisation
- the tenant induced the landlord to enter into the tenancy using a false, misleading or deceptive statement or by knowingly concealing a material fact regarding their identity or workplace

- the tenant no longer meets the landlord charity's eligibility requirements
- the tenant no longer meets the landlord National Rental Affordability Scheme approved participant's requirements
- the tenant is no longer a student of the relevant educational institution
- the tenant is no longer the landlord's employee.

A landlord may give a notice of termination where they are aware of a tenant or another person engaging in drug related conduct on the premises or ancillary property (when testing has confirmed contamination is a result of drug related conduct).

Fixed term tenancy

Unless mutually agreed, neither the landlord nor the tenant can terminate a fixed term agreement before the end of the term without being held responsible for costs associated with finding a new tenant. For further information, contact CBS for advice.

The tenant may terminate a fixed term agreement at the end of the term after giving at least 28 days' written notice.

A landlord may terminate a fixed term agreement at the end of the term by giving at least 60 days' written notice on one of the following grounds of termination:

- the landlord requires possession of the premises for the landlord's own occupation, or occupation by the landlord's spouse, child or parent, or occupation by the spouse of the landlord's child or parent
- where the premises are required for demolition
- where possession of the premises is required for repairs or renovations that cannot be carried out conveniently while the tenant remains in possession of the premises
- where the premises has been sold and the new purchaser requires vacant possession
- the tenant or visitor intentionally or negligently caused serious damage to the premises to an area near the premises or to safety equipment on/near the premises
- the tenant or visitor gave rise to a serious risk to the life, health or safety of the landlord/agent or person residing nearby
- the tenant caused/permitted the premises to be unfit for human habitation, destroyed totally or to the extent that they are unsafe
- the tenant or other person residing at the premises threatened or intimidated the landlord/agent/contractor or employee of the landlord/agent
- the tenant has been given 2 breach notices and has breached the residential tenancy agreement in the same/substantially similar manner a third time
- the tenant has used/caused the premises to be used for an illegal purpose (including drug related conduct)
- the tenant failed to pay the bond
- the tenant kept a pet on the premises without authorisation
- the tenant induced the landlord to enter into the tenancy using a false, misleading or deceptive statement or by knowingly concealing a material fact regarding their identity or workplace
- the tenant no longer meets the landlord charity's eligibility requirements

- the tenant no longer meets the landlord National Rental Affordability Scheme approved participant's requirements
- the tenant is no longer a student of the relevant educational institution
- the tenant is no longer the landlord's employee.

If a notice of termination is not given by either party, the agreement will continue as a periodic tenancy.

At the end of a fixed term tenancy, if 60 days' notice is given to a tenant and the tenant has not vacated the premises, the landlord may apply to the South Australian Civil and Administrative Tribunal (SACAT) for an order for possession of the premises.

Termination for breach of agreement

Both the landlord and the tenant can give a termination notice on the required form to the other for a breach of the conditions of the residential tenancy agreement. A tenant has 7 days from receiving notification to remedy the breach unless it is served on the ground of a failure to pay rent.

If the landlord has served a valid termination notice for breach of contract or rent arrears of more than 14 days and the breach or rent arrears is not rectified within 7 days, the tenancy may terminate when the notice expires. If vacant possession is not given by the requested date, the landlord may apply to SACAT for an order of possession. Only a SACAT bailiff can enforce an order for vacant possession.

If a party (the respondent) disputes the termination notice, they can apply to SACAT for an order stating that they are not in breach or that the breach has been fixed.

If a notice of termination is served for rent arrears on at least 2 occasions in a 12-month period, the landlord may make application to SACAT for vacant possession without first serving a third breach notice on the tenant.

Termination for frustrated agreement

A landlord or tenant may terminate a residential tenancy agreement if the premises or a substantial portion of the premises are uninhabitable or are no longer able to be used for residential purposes or have been acquired by compulsory process.

The landlord must provide at least 60 days' notice to the tenant and the tenant may provide notice that the agreement will terminate immediately.

Termination by tenant if premises for sale

The tenant can terminate a tenancy if within 2 months after the start of the agreement the landlord enters into a contract for the sale of the premises and the landlord did not advise the tenant of the intention to sell before the agreement was entered into.

Termination for undue hardship

Under the Act, if continuing the tenancy would cause undue hardship to either the landlord or the tenant, an application can be lodged with SACAT for termination of the tenancy. Generally, 'undue hardship' does not include financial difficulties.

Forms Live Sign
Page: 32 / 49
5b183e8f-807a-4e76-928f-3d8ca1d839b2

Termination for requiring care

Under the Act, a tenant may terminate a tenancy if they require aged, palliative, or special care, if they have accepted South Australian Housing Trust or community housing accommodation, or if they require temporary crisis accommodation.

Keeping tenant information

When you apply for a rental premises in South Australia you will be asked to provide personal details to complete your application.

This information is protected by law against misuse, interference, loss, unauthorised access, modification or disclosure. Some information you can't be asked for, as detailed on pages 7 and 8.

Disclosure of personal details

A person who holds tenant information or prospective tenant information must not disclose the information except:

- with the consent of the person whose information it is
- as required or authorised by law, or a residential tenancy agreement to which the person who provided the information is a party
- in accordance with an order of a court or tribunal.

If tenant information that relates to you has been dealt with in a way that breaches the requirements, you may make an application to SACAT seeking compliance.

Misleading information

Residential tenancy laws also prohibit any exchange of falsified information or documents between landlords/agents, tenants and those applying for a tenancy.

Refund of bond

The bond money belongs to the tenant. It is important for the tenant to arrange for the bond to be refunded when the tenancy ends.

It is important for the tenant to provide their landlord/agent or CBS with their forwarding address so they can be informed of the bond refund process.

Where parties agree

At the end of the tenancy when the tenant and landlord agree how the bond is to be repaid, the bond can be refunded by submitting a claim online. If a bond refund form is lodged, it should be completed and signed by both parties (signature verification must be provided). The bond can be paid via electronic funds transfer.

Notice of claim

If a bond is requested by the tenant/co-tenants without the landlord/agent's consent, the landlord/agent is notified and given an opportunity to dispute it.

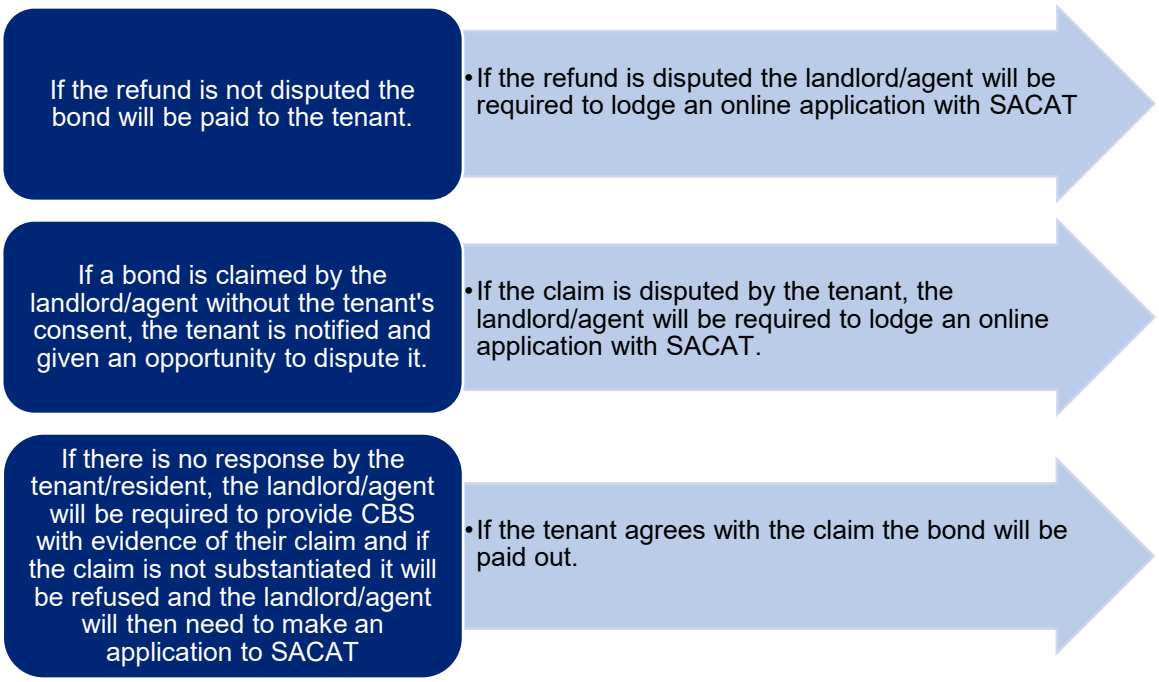

Bonds may also be claimed in equal/unequal shares by co-tenants. If an application proposes that the bond be paid to co-tenants in unequal shares (and the landlord has agreed to their share of the bond, if any), the Commissioner must pay the bond as proposed in the application (if all co-tenants have consented to the proposal). If a balance of a bond (after a specified amount is to be paid to the landlord) is proposed to be paid in equal shares to co-tenants, then only one of the tenants must consent.

Disputed bonds

A bond dispute will be referred to SACAT which will list the matter for a conference or hearing. If an agreement cannot be reached at a conference, a full hearing may be set down for a later date.

If a dispute arises over how the bond should be refunded, either party can contact CBS for advice on 131 882.

RentRight SA can provide free and independent advocacy support at SACAT. For more information about its services call 1800 060 462 or email rentrightsa@syc.net.au.

Unclaimed money

If a bond has been paid for a property rented in the past and the refund of that bond has not been applied for, that bond may still be held in the Residential Tenancies Fund. After providing details about the tenancy in question (that is, the exact address, the other party's name, the bond amount and proof of identity), CBS can refund the bond accordingly.

If you believe there is unclaimed money belonging to you held in the Fund, please search the bond status at https://portal.cbs.sa.gov.au/consumer/s/search-bond or contact CBS on 131 882.

Sub-letting and assignment

A tenant has the right, with the landlord's written approval, to sub-let the rental premises, or assign their interest to another party. The landlord cannot unreasonably refuse tenants sub-letting rental properties and may only seek reasonable expenses arising from the sub-letting of premises.

- **To 'sub-let' means that a tenant rents out all or part of the premises to someone else, and in effect becomes the landlord to the subtenant.**
- **To 'assign' means to transfer a tenancy to someone else. That does not mean, however, that the original tenant no longer has responsibility for the tenancy.**
- **Before sub-letting or assigning a tenancy, it is advisable to first contact CBS.**

Dispute resolution

It is the role of CBS to give information to landlords and tenants. Any party to a residential tenancy dispute may apply to SACAT.

SACAT may, either before or during the hearing of proceedings, appoint a mediator to achieve a negotiated settlement. SACAT may also refer the matter to a conference or hearing.

If you are a party to a tenancy dispute and require advice, contact CBS on 131 882.

SACAT hearings

SACAT is an independent specialist Tribunal that provides a prompt and informal way of determining disputes between landlords and tenants. Both landlords and tenants may apply to SACAT to have disputes determined.

There is a cost to apply to SACAT. Members of SACAT conduct hearings with a minimum of formality. Both parties are expected to attend and usually present their own cases. SACAT is located at Level 4, 100 Pirie Street, Adelaide and can be contacted on free call 1800 723 767 or visit sacat.sa.gov.au.

Community housing organisations

Community housing providers and housing co-operatives are community managed organisations. They provide affordable housing for people on low incomes or with special housing needs who can't access or maintain other forms of accommodation.

The tenants of community housing organisations are covered by the Act, but there are some sections that are varied or don't apply. Community housing organisations can apply to SACAT for further exemptions or variations of a section of the Act.

For information about accommodation through a community housing organisation visit Renting from a community group on the sa.gov.au website.

More information

For more detailed information and advice about tenancy matters, contact:

Consumer and Business Services
Customer Service Centre
4-6 Chesser Street
ADELAIDE SA 5000
(GPO Box 965, ADELAIDE SA 5001)

Telephone: 131 882
Website: sa.gov.au/housing/private-rentals

Regional CBS office

9 Mackay Street, PORT AUGUSTA

Bond lodgement facilities are available at Service SA offices located at:

- Berri
- Gawler
- Kadina
- Mount Gambier
- Murray Bridge
- Naracoorte
- Port Augusta
- Port Lincoln
- Port Pirie
- Whyalla

Please note, only cash, cheque or money orders can be taken at these offices.

Translating and Interpreting Service

If you have difficulty in understanding this pamphlet, ring the Translating and Interpreting Service on 131 450. Don't hang up, your call will be answered (Local call cost only).

Arabic

إذا كنت تواجه صعوبة في فهم هذه النشرة، فيرجى الاتصال بخدمة الترجمة التحريرية والشفوية على الرقم 131 450. لا تُغلق الخط، سيتم الرد على اتصالك (يتم احتساب تكلفة المكالمة المحلية فقط).

Amharic

ይህን በራሪ ወረቀት ለመረዳት ካስቸገርዎ በስልክ 131 450 ለትርጉምና አስተርጓሚ አገልግሎት ደውሎ ማነጋገር። ስልኩን አይዝጉ ጥሪዎ መልስ እስኪያገኝ ድረስ (በአካባቢ ጥሪ ዋጋ ብቻ ነው)።

Chinese Simplified

如果您不太能理解本手册，请拨打翻译与传译服务热线 131

450。接通后请勿挂断，有人会与您通话（仅需支付本地电话费）。

Croatian

Ako imate poteškoća razumjeti ovu brošuru, nazovite Službu za prevođenje i tumačenje na 131 450. Nemojte spuštati slušalicu, na vaš će poziv biti odgovoreno (po cijeni mjesnog poziva).

Farsi (Persian)

اگر درک این جزوه برای شما سخت است، با خدمات ترجمه کتبی و شفاهی به شماره 131 450 تماس بگیرید. قطع نکنید، به تماس شما پاسخ داده خواهد شد. (فقط هزینه تماس داخلی)

Greek

Εάν δυσκολεύεστε να κατανοήσετε αυτό το φυλλάδιο, καλέστε την Υπηρεσία Μετάφρασης και Διερμηνείας στο 131 450. Μην κλείσετε το τηλέφωνο, η κλήση σας θα απαντηθεί (Μόνο κόστος τοπικής κλήσης).

Hazaragi

اگه شمو کدم مشکل قد فامیدون ازی ورقه مالوماتی دیرین، بلدی خدمات ترجمانی نوشته شده و گفتاری د شماره 131 450 زنگ بزنین تیلفون ره قد نکنین، زنگ از شمو جواب دیده موشه (هزینه شی به اندازه زنگ د شماره محلی استه).

Hungarian

Ha a közlemény megértése nehézséget okoz, hívja a TIS fordító- és tolmácsszolgálatot a 131 450 számon. Kérjük, legyen türelemmel, hívását fogadják majd. (Helyi hívásnak számít.)

Italian

Se avete difficoltà a comprendere questo opuscolo, chiamate il Servizio di Traduzione e Interpretariato al numero 131 450. Non riattaccate, vi risponderanno (solo al costo di una chiamata locale).

Khmer

ប្រសិនបើអ្នកមានការលំបាកក្នុងការយល់អំពីខិត្តប័ណ្ណនេះ សូមទូរសព្ទទៅសេវាបកប្រែភាសាសរសេរ និងបកប្រែផ្ទាល់មាត់
តាមលេខ
131 450។ សូមកុំដាក់ទូរសព្ទចុះ ការហៅទូរសព្ទរបស់អ្នកនឹងត្រូវបានគេឆ្លើយតប
(បង់តម្លៃការហៅទូរសព្ទក្នុងតំបន់ប៉ុណ្ណោះ)។

Polish

Jeśli masz trudności ze zrozumieniem tej broszury, zadzwoń do Telefonicznej Służby Tłumaczy (TIS National) pod numer 131 450. Nie rozłączaj się, połączenie zostanie odebrane (tylko cena połączenia lokalnego).

Portuguese

Se tiver dificuldade em compreender este folheto, ligue para o Serviço de Tradução e Interpretação em 131 450. Não desligue, a sua chamada será atendida (apenas custo de chamada local).

Romanian

Dacă aveți probleme în a înțelege acest pamflet, sunați la Serviciul de Traduceri și Interpretări la numărul 131 450. Nu închideți, apelul dumneavoastră va fi preluat. (Costul este ca pentru un apel local.)

Russian

Если вы испытываете трудности с пониманием данного памфлета, позвоните в Переводческую службу «Translating and Interpreting Service» по номеру 131 450. Не вешайте трубку, на ваш звонок ответят (применим тариф местного звонка).

Serbian

Ако вам је тешко да разумете овај памфлет, позовите Преводилачку и тумачку службу (Translating and Interpreting Service) на 131 450. Не прекидајте везу, добићете одговор (По цени локалног позива).

Spanish

Si tiene dificultades para comprender este folleto, llame al Servicio de Traducción e Interpretación, en el 131 450. No cuelgue, atenderán su llamada (costo de llamada local solamente).

Tamil

இந்தத் துண்டு வெளியீட்டைப் புரிந்துகொள்வதில் உங்களுக்குச் சிரமம் இருந்தால், 131 450 என்ற மொழிபெயர்ப்பு மற்றும் மொழிபெயர்துரைப்புச் சேவையை அழைக்கவும். அழைப்பைத் துண்டிக்காதீர்கள். உங்கள் அழைப்புக்கு பதிலளிக்கப்படும் (உள்ளூர் தொலைபேசி அழைப்பின் விலைக்கு இது கிடைக்கிறது).

Turkish

Bu broşürü anlamakta zorlanıyorsanız 131 450 numaralı telefondan Yazılı ve Sözlü Çeviri Hizmetleri'ni arayın. Telefonu kapatmayın, çağrınız yanıtlanacaktır (Yalnızca yerel arama ücretleri uygulanır).

Ukrainian

Якщо вам важко зрозуміти цю брошуру, зателефонуйте до Служби письмового та усного перекладу за номером 131 450. Не кладіть слухавку, на ваш дзвінок дадуть відповідь (вартість дзвінка – лише за місцевими тарифами).

Tigrinya

ነዙይ ጽሑፋዊ ወረቐቲ ንክትርድኣ እንተ ጸጊሙካ ነቲ ኣገልግሎት ትርጕምን ምስትርጓም ብስልኪ 131 450 ምድዋል። ነቲ ስልኪ ኣይትእጸዎ ነቲ ደወል ምላሽ ኪወሃበካ እዩ (ብናይ ከባቢ ደወል ዋጋ ጥራይ እዩ)።

Vietnamese

Nếu quý vị gặp trở ngại không hiểu được tập sách nhỏ này, hãy gọi cho Dịch vụ Thông Phiên Dịch qua số 131 450. Đừng gác máy, cuộc gọi của quý vị sẽ được trả lời (Chỉ tính phí cuộc gọi địa phương).

Forms Live Sign
Page: 39 / 49
5b183e8f-807a-4e76-928f-3d8ca1d839b2

Handbook for Residents

La Verde Apartments 56-60 King William Street, KENT TOWN SA 5067

Community Corporation Nos. 41146 Inc.

Last updated: June 24

Forms Live Sign
Page: 40 / 49
5b183e8f-807a-4e76-928f-3d8ca1d839b2

Contents

Contents 2
Welcome 3
Introduction 3
History of La Verde 3
Contact Information 4
Emergencies 4
Emergency Repairs / Maintenance 4
Note on Locking Oneself Out 4
Policies & Procedures 4
Moving In or Out 4
Noise 6
Balconies 7
Pets 7
Carparks 8
Maintenance & Services 8
Maintenance Requests 8
Cleaning & Caretaking 9
Waste Disposal 9
Bin Collection Days 10
Safety & Security 10
Entry Fobs 10
Gate Remotes 10
Apartment Keys 10
Service Infrastructure 11
Fire Safety 11
Lift Maintenance & Repairs 11

Forms Live Sign
Page: 41 / 49
5b183e8f-807a-4e76-928f-3d8ca1d839b2

Welcome

Introduction

Welcome to La Verde, a vibrant residential community near the centre of all the inner-city action, with shops, bars and restaurants, museums, art galleries and entertainment venues and the Botanic Garden all right at your doorstep.

This is a guide to ensure continued harmony within the community title and to provide a friendly, respectful, and welcoming environment for all residents.

Compliance with this information booklet will ensure that living at this residential complex is a pleasant experience.

The information in the handbook is based on policies made by the management committee and members, as well as extracts from the Corporation's bylaws.

Persons bound by the bylaws include all owners, residents, their invitees or guests, employees, contractors, agents, and employees.

If any person should breach the bylaws, a fine of up to $500 may be imposed on and payable by the lot (apartment) owner. Should you require a copy of the bylaws, please contact the body corporate manager (see 'Contacts').

History of La Verde

In the Adelaide city fringe suburb of Kent Town, La Verde became the state's first apartment project using an innovative timber construction technique built by local building company Morgan and Hansen.

La Verde has 54 apartments, 7 SOHO apartments, ground-floor retail and commercial offices.

The building is unique not only in the materials used but also because of the harmonious common areas for residents such as a central piazza.

Forms Live Sign
Page: 42 / 49
5b183e8f-807a-4e76-928f-3d8ca1d839b2

Contact

Body Corporate Manager
Munro Property
P: 08 8132 2000
E: corporations@munroproperty.com.au

SAPOL
Emergency: 000
Non-Emergency: 131 444

Clean All Services
Larissa: 0431 520 060 (Mon, Wed, Fri 7 AM -3 PM)

Emergencies

In the event of a medical emergency, fire, or urgent police attendance, please call **000** in the first instance.

Emergency Repairs / Maintenance

Please be advised that repairs and maintenance that are not the Corporation's responsibility are the responsibility of the owner (i.e. leaking tap, broken window, etc.).

In the event of an urgent repair, please call Munro Property on 08 8132 2000. If the call is made afterhours, it will be diverted to HPG Insurance & Maintenance Works who have been have information and instructions specific to La Verde.

Note on Locking Oneself Out

Please note that locking yourself out is not considered an emergency and any fees incurred for this service will be payable by the resident.

Policies & Procedures

Moving In or Out

There are a few simple rules to follow when moving in or out. These rules are intended to minimise disruption to fellow residents and to prevent damage to the building.

Forms Live Sign
Page: 43 / 49
5b183e8f-807a-4e76-928f-3d8ca1d839b2

Rules & Procedures

Moving is restricted to between 7:00 AM and 2:00 PM on Mondays, Wednesdays and Fridays. This is because these are the days the caretaker is on the premises and they are required to put the protective lift coverings up, lock an elevator out for you and reserve the loading area.

Should you need their services outside of these hours, you will incur a cost of $88 inc GST as the caretaker will need to attend outside their contracted hours.

No moves are permitted on Sundays or Public Holidays. Moving must be arranged with Munro Property at least 48 hours before the move.

The following information is required to be provided to Munro Property:

- Apartment number
- Occupant/s' name and contact details
- Property manager's name and contact number (if applicable)
- Proposed day and time of moving in/out
- Name, address and contact number of the removalist or contractor
- Specify if the use of the lift is required and if so, the proposed times of use
- Forwarding details for the outgoing occupant/s

You will be responsible for any damage to common areas that occurs during your move. Management will inspect the areas prior to and following the move and, in the event of identified damage, inform you of any costs of the repairs undertaken.

On the Day

The removalist may enter the driveway and park to one side. It is imperative that the truck does not block access, particularly on Mondays, Wednesdays and Fridays when the bins are emptied.

Items can be transported through the carpark, through the access door, into the foyer and then to the lift.

During your moving times, one lift will be "locked", and will only travel from the ground floor to your floor for your convenience and the other residents' safety.

Forms Live Sign
Page: 44 / 49
5b183e8f-807a-4e76-928f-3d8ca1d839b2

Friendly Reminders

- Do not leave boxes near doorways or stairwells as this is a safety hazard.
- Debris or boxes must not be left on common property.
- Please retain this information sheet for future use, and forward to your property manager (if applicable).

Noise

Whether you're an experienced member of community living or a relatively new convert to the apartment lifestyle, enjoying your own home also means living happily alongside others.

It is important to remember that in a community-titled property, you live in close proximity to your neighbours. Please keep volumes of stereos, televisions, and musical instruments to an acceptable level and avoid loud conversations on balconies and in public area. Sound also travels down through the floor levels.

In the first instance of a problem with noise, try talking with your neighbour. More often than not your neighbour may be completely unaware that they are even disturbing anyone around them. If you are unable to meet with them directly, a polite handwritten note is an alternate approach.

If communicating with your neighbour doesn't work out favourably, you'll need to consider talking to the body corporate manager. Under the guidance of the management committee, Munro can contact the owner of the neighbouring apartment and seek to remedy the issue.

As a general rule, no excessive noise should occur after 10 PM on weeknights and after 12 PM on Fridays and Saturdays.

If you are undertaking work at your property, or have engaged a tradesperson to do so, please ensure that construction noise ceases between the hours of 7 PM and 7 AM Monday to Saturday. It is also common courtesy to notify your neighbours of any expected disturbance.

Care should also be taken when using the fire escape doors. If not closed carefully, the slamming of the door can be disruptive to adjacent apartment residents.

Forms Live Sign
Page: 45 / 49
5b183e8f-807a-4e76-928f-3d8ca1d839b2

Balconies

Your balcony is an extension of your home and also aesthetically adds to the look of the La Verde building that everyone enjoys.

We all have different likes and tastes, so to keep a uniform look and feel to the façade of the building we have the following rules:

- No items are to be thrown from an apartment window or balcony. This is illegal and dangerous.
- No one is permitted to hang washing, clothing or any other article from or on a balcony.
- Care must be taken when watering plants to prevent water running from your balcony onto the balconies of apartments below.
- You must not place any article other than outdoor settings, chairs, barbeques, or plants on the balcony.
- Barbeques must be connected to the mains gas. No charcoal or gas bottles are permitted.
- Any blinds or awnings fixed to the balcony that is visible from the streetscape must be in a neutral colour.

The bylaws should be consulted prior to erecting or fixing any fittings to the external walls or ceiling and written consent gained from the Body Corporate.

Pets

La Verde is a pet-friendly building but not everyone may like your furry friend jumping all over them as much as you do. To ensure all residents and pets live in harmony there are some rules regarding your pet that need to be followed.

All pets at the building must be approved by the Body Corporate Committee and you must abide by the rules pertaining to pets, including:

- Your pet must be less than 12 kilograms in weight.
- All dogs must be registered
- Cats and dogs must be desexed and microchipped
- Pets must be able to be carried at all times when in any community areas of the building. This includes the piazza, corridors and the carpark (everywhere except your apartment).
- Pets must not disturb other residents with ongoing noise.

Forms Live Sign
Page: 46 / 49
5b183e8f-807a-4e76-928f-3d8ca1d839b2

- If your pet causes any mess on common property it is your responsibility to clean up after them.
- No pet-associated odours should be allowed to impact any community area or another resident's lot.
- Any pet that attacks a resident, guest, employee or other pet will immediately be banned from the building.
- Certified guide/assistance animals are automatically approved for residence with their owner at La Verde.
- An *Approval of Pet Application* form is available from the Strata Manager.

Tenants note: The above is also subject to approval from your property manager / landlord.

Carparks

All apartments have an allocated car park and residents should park their cars in their allocated space.

Cars must not be parked on main access driveways or in any position where they may cause an obstruction to others. Car bays are not to be used for any purpose other than the parking of a motor vehicle or motorcycle.

In the interests of safety, children are not permitted to ride cycles or play games in the car parking areas or driveways.

Each residence has one allocated parking space in the undercroft carpark. As per the Corporation bylaws, a person must take reasonable steps to ensure that their vehicle does not unreasonably obstruct other parking bays.

The parking spaces should not be used for non-vehicle storage purposes unless otherwise agreed to by the Corporation.

Maintenance & Services

Maintenance Requests

Maintenance requests can be submitted via email to the body corporate manager (See Contacts). Please include photographs to expedite the resolution process. Requests will be addressed based on priority.

Forms Live Sign
Page: 47 / 49
5b183e8f-807a-4e76-928f-3d8ca1d839b2

Cleaning & Caretaking

Clean All Services have been engaged by the Corporation to clean and maintain the common areas, as well as attend to minor repairs. They are onsite Mondays, Wednesdays & Fridays from 7 AM to 3 PM.

Waste Disposal

Residents must properly dispose of all refuse. Each level (excluding the SOHO apartments) has two bin chutes: one for general waste and one for recyclable materials. Recyclable materials include:

- Glass bottles and jars
- Plastic containers (lids off)
- Milk and juice cartons
- Steel and aluminium cans
- Paper and cardboard

Please note: No plastic bags

To prevent blockage, all waste must be bagged, tied, or sealed shut and be of a size that will freely fall down the chutes into the garbage bins. This includes breaking down all boxes, including food boxes such as pizza boxes, to a size that fits down the chute.

For safety, place all glass bottles in bags and tie them securely to prevent breakage. Do not dispose of flammable materials or objects down the chute.

To avoid disturbing nearby residents, do not use the chutes between 9:00 PM and 7:00 AM.

Any spillages of food or liquids along the walkways (common areas) from transporting garbage must be cleaned up immediately.

Residents are responsible for disposing of larger items, such as boxes from moving, discarded household appliances, or furniture. These items must not be left or stored in any common areas.

Forms Live Sign
Page: 48 / 49
5b183e8f-807a-4e76-928f-3d8ca1d839b2

Bin Collection Days

Bin collection days are on a Monday, Wednesday and Friday.

Safety & Security

Please ensure that all security doors / gates are closed and locked behind you. Security should take precedence over courtesy or convenience.

Entry Fobs

You should have received entry fob(s) upon the sale of the property or entering into a tenancy agreement. If you are a tenant and you require additional fobs, please contact your property manager. If you are an owner, please contact the body corporate manager (see Contacts).

For the security of the building, all fobs issued are recorded and must be accounted for whenever occupancy changes. All apartments may have a maximum of five (5) fobs. Should a fob be lost, stolen or damaged, it will require deactivation. You should always keep a record of the fob numbers in your possession to ensure a smooth transition should a fob require replacement.

Gate Remotes

You should have received gate remote(s) upon the sale of the property or entering into a tenancy agreement. If you are a tenant and you require additional remotes, please contact your property manager. If you are an owner, please contact the body corporate manager (see Contacts).

Apartment Keys

You should have received apartment door key(s) upon the sale of the property or entering into a tenancy agreement. If you are a tenant and you require additional keys, please contact your property manager. If you are an owner, please contact the body corporate manager for authority (see Contacts).

Forms Live Sign
Page: 49 / 49
5b183e8f-807a-4e76-928f-3d8ca1d839b2

Service Infrastructure

Fire Safety

Fire safety equipment and smoke alarms are checked and serviced by Performance Fire Services. Access may be required sporadically to test smoke alarms.

If you notice repairs required to any of the fire service equipment, please notify the body corporation manager immediately (see Contacts).

Lift Maintenance & Repairs

Schindler Lifts attends the property periodically to attend to repairs and carry out maintenance to the lifts.

If you notice repairs required to either of the lifts, please notify the body corporation manager immediately (see Contacts).

Notice to Tenant of Lease Extension

(Note: *Do not use this form for periodic or short fixed term tenancies*)

klemich property management

To:

Tenant 1: Om Prasad Dash

Tenant 2: Rinita Shadangi

Tenant 3:

Tenant 4:

Tenant 5:

Tenant 6:

(name of tenant/s)

Address of rented premises:

Street: UNIT 23 / 58 KING WILLIAM STREET

Suburb: KENT TOWN State: SA Postcode: 5067

I give you notice that your current lease expires on 23 / 03 / 2026
(insert date)

I wish to offer you an extension of your lease for a further 12 months ~~weeks.~~
(Strike out whichever is not appropriate)

The lease extension will expire on 23 / 03 / 2027
(insert date)

Your current rent is $ 700 per week
(amount) *(rental period e.g. - fortnight)*

The rent will be increased ☐ will not be increased ☑ will be decreased ☐
(Tick one only)

~~The rent will be $ _____ per _____ with the first payment due on ___ / ___ / _____~~
(amount) *(rental period e.g. - fortnight)* *(date)*

The Terms of your lease are varied as follows and if not varied then remain the same:

☑ N/A ☐ As detailed below ☐ See annexure

To accept, sign this form and send to your landlord/agent by: 23 / 02 / 2026

(If the date is not at least 60 days before the lease term is due to end, the landlord may not be in a position to provide the required notice to terminate the fixed term tenancy upon nonacceptance of the lease extension)

IMPORTANT INFORMATION:

- If you want to vacate at the end of the fixed term you must give your landlord at least 28 days written notice (Form 17 - Notice of termination by tenant at end of fixed term tenancy) to end the agreement.
- If you do not return this form, the landlord may give at least 60 days written notice (Form 9 - Notice of termination by landlord at end of fixed term tenancy) to end the agreement (on a prescribed ground).
- If the lease is not extended and the required notice period is not given by either party the agreement will continue as periodic.

Notice to Tenant of Lease Extension

(Note: *Do not use this form for periodic or short fixed term tenancies*)

klemich property management

Tenant Acknowledgement:

I/We wish to accept the offered lease extension for this premises.

Note: *If you do not accept this offer you must give your landlord/agent at least 28 days written notice (Form 17 - Notice of termination by tenant at end of fixed term tenancy) if you choose to end the agreement*

Signature of Tenant 1 Om Prasad Dash Date: 19/11/2025

Tenant Full Name Om Prasad Dash

Signature of Tenant 2 Rinita Shadangi Date: 19/11/2025

Tenant Full Name Rinita Shadangi

Signature of Tenant 3 Date:

Tenant Full Name

Signature of Tenant 4 Date:

Tenant Full Name

Signature of Tenant 5 Date:

Tenant Full Name

Signature of Tenant 6 Date:

Tenant Full Name

Signature of the Landlord/Agent 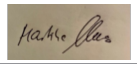 Date: 20/11/2025

☑ Agent as authorised ☐ Landlord

Property Interest Report

Provided by Land Services SA on behalf of the South Australian Government

Title Reference	CT 6200/70	**Reference No.** 2818406
Registered Proprietors	D S*KEEGAN & ANR	**Prepared** 15/09/2026 09:12
Address of Property	Unit 23, 58 KING WILLIAM STREET, KENT TOWN, SA 5067	
Local Govt. Authority	NORWOOD PAYNEHAM & ST PETERS	
Local Govt. Address		

This report provides information that may be used to complete a Form 1 as prescribed in the *Land and Business (Sale and Conveyancing) Act 1994*

Table of Particulars

Particulars of mortgages, charges and prescribed encumbrances affecting the land as identified in Division 1 of the Schedule to Form 1 as described in the Regulations to the *Land and Business (Sale and Conveyancing) Act 1994*

All enquiries relating to the Regulations or the Form 1 please contact Consumer & Business Services between 8:30 am and 5:00 pm on 131 882 or via their website www.cbs.sa.gov.au

Prescribed encumbrance		Particulars (Particulars in bold indicates further information will be provided)
1.	**General**	
1.1	Mortgage of land *[**Note** - Do not omit this item. The item and its heading must be included in the statement even if not applicable.]*	Refer to the Certificate of Title
1.2	Easement (whether over the land or annexed to the land) Note--"Easement" includes rights of way and party wall rights *[**Note** - Do not omit this item. The item and its heading must be included in the statement even if not applicable.]*	Refer to the Certificate of Title
1.3	Restrictive covenant *[**Note** - Do not omit this item. The item and its heading must be included in the statement even if not applicable.]*	Refer to the Certificate of Title for details of any restrictive covenants as an encumbrance
1.4	Lease, agreement for lease, tenancy agreement or licence (The information does not include information about any sublease or subtenancy. That information may be sought by the purchaser from the lessee or tenant or sublessee or subtenant.) *[**Note** - Do not omit this item. The item and its heading must be included in the statement even if not applicable.]*	Refer to the Certificate of Title also Contact the vendor for these details
1.5	Caveat	Refer to the Certificate of Title
1.6	Lien or notice of a lien	Refer to the Certificate of Title
2.	***Aboriginal Heritage Act 1988***	
2.1	section 9 - Registration in central archives of an Aboriginal site or object	Aboriginal Affairs and Reconciliation in AGD has no registered entries for Aboriginal sites or objects affecting this title
2.2	section 24 - Directions prohibiting or restricting access to, or activities on, a site or	Aboriginal Affairs and Reconciliation in AGD has no record of any direction affecting this title

	an area surrounding a site	
2.3	Part 3 Division 6 - Aboriginal heritage agreement	Aboriginal Affairs and Reconciliation in AGD has no record of any agreement affecting this title also Refer to the Certificate of Title

3. *Burial and Cremation Act 2013*

3.1	section 8 - Human remains interred on land	Births, Deaths and Marriages in AGD has no record of any gravesites relating to this title also contact the vendor for these details

4. *Crown Rates and Taxes Recovery Act 1945*

4.1	section 5 - Notice requiring payment	Crown Lands Program in DEW has no record of any notice affecting this title

5. *Development Act 1993* (repealed)

5.1	section 42 - Condition (that continues to apply) of a development authorisation *[**Note** - Do not omit this item. The item and its heading must be included in the statement even if not applicable.]*	**State Planning Commission in the Department for Housing and Urban Development will respond with details relevant to this item** also Contact the Local Government Authority for other details that might apply
5.2	section 50(1) - Requirement to vest land in a council or the Crown to be held as open space	State Planning Commission in the Department for Housing and Urban Development has no record of any conditions that continue to apply, affecting this title also Contact the Local Government Authority for other details that might apply
5.3	section 50(2) - Agreement to vest land in a council or the Crown to be held as open space	State Planning Commission in the Department for Housing and Urban Development has no record of any conditions that continue to apply, affecting this title also Contact the Local Government Authority for other details that might apply
5.4	section 55 - Order to remove or perform work	State Planning Commission in the Department for Housing and Urban Development has no record of any order or notice affecting this title also Contact the Local Government Authority for other details that might apply
5.5	section 56 - Notice to complete development	State Planning Commission in the Department for Housing and Urban Development has no record of any order or notice affecting this title also Contact the Local Government Authority for other details that might apply
5.6	section 57 - Land management agreement	Refer to the Certificate of Title
5.7	section 60 - Notice of intention by building owner	Contact the vendor for these details
5.8	section 69 - Emergency order	State Planning Commission in the Department for Housing and Urban Development has no record of any order affecting this title also Contact the Local Government Authority for other details that might apply
5.9	section 71 - Fire safety notice	Building Fire Safety Committee in the Department for Housing and Urban Development has no record of any notice affecting this title

5.10	section 84 - Enforcement notice	State Planning Commission in the Department for Housing and Urban Development has no record of any conditions that continue to apply, affecting this title also Contact the Local Government Authority for other details that might apply
5.11	section 85(6), 85(10) or 106 - Enforcement order	State Planning Commission in the Department for Housing and Urban Development has no record of any conditions that continue to apply, affecting this title also Contact the Local Government Authority for other details that might apply
5.12	Part 11 Division 2 - Proceedings	Contact the Local Government Authority for other details that might apply also Contact the vendor for these details

6. Repealed Act conditions

6.1	Condition (that continues to apply) of an approval or authorisation granted under the *Building Act 1971* (repealed), the *City of Adelaide Development Control Act, 1976* (repealed), the *Planning Act 1982* (repealed) or the *Planning and Development Act 1967* (repealed) *[**Note** - Do not omit this item. The item and its heading must be included in the statement even if not applicable.]*	**State Planning Commission in the Department for Housing and Urban Development will respond with details relevant to this item** also Contact the Local Government Authority for other details that might apply

7. *Emergency Services Funding Act 1998*

7.1	section 16 - Notice to pay levy	**An Emergency Services Levy Certificate will be forwarded.** **If you do not receive the certificate within four (4) working days please contact the RevenueSA Customer Contact Centre on (08) 8226 3750.** **Clients who have misplaced or not received their certificates and are RevenueSA Online users should log into RevenueSA Online and reprint their certificates www.revenuesaonline.sa.gov.au**

8. *Environment Protection Act 1993*

8.1	section 59 - Environment performance agreement that is registered in relation to the land	EPA (SA) does not have any current Performance Agreements registered on this title
8.2	section 93 - Environment protection order that is registered in relation to the land	EPA (SA) does not have any current Environment Protection Orders registered on this title
8.3	section 93A - Environment protection order relating to cessation of activity that is registered in relation to the land	EPA (SA) does not have any current Orders registered on this title
8.4	section 99 - Clean-up order that is registered in relation to the land	EPA (SA) does not have any current Clean-up orders registered on this title
8.5	section 100 - Clean-up authorisation that is registered in relation to the land	EPA (SA) does not have any current Clean-up authorisations registered on this title
8.6	section 103H - Site contamination assessment order that is registered in relation to the land	EPA (SA) does not have any current Orders registered on this title
8.7	section 103J - Site remediation order that is registered in relation to the land	EPA (SA) does not have any current Orders registered on this title
8.8	section 103N - Notice of declaration of special management area in relation to the land (due to possible existence of site contamination)	EPA (SA) does not have any current Orders registered on this title

8.9	section 103P - Notation of site contamination audit report in relation to the land	EPA (SA) does not have any current Orders registered on this title
8.10	section 103S - Notice of prohibition or restriction on taking water affected by site contamination in relation to the land	EPA (SA) does not have any current Orders registered on this title

9. *Fences Act 1975*

9.1	section 5 - Notice of intention to perform fencing work	Contact the vendor for these details

10. *Fire and Emergency Services Act 2005*

10.1	section 105F - (or section 56 or 83 (repealed)) - Notice to take action to prevent outbreak or spread of fire	Contact the Local Government Authority for other details that might apply Where the land is outside a council area, contact the vendor

11. *Food Act 2001*

11.1	section 44 - Improvement notice	Public Health in DHW has no record of any notice or direction affecting this title also Contact the Local Government Authority for other details that might apply
11.2	section 46 - Prohibition order	Public Health in DHW has no record of any notice or direction affecting this title also Contact the Local Government Authority for other details that might apply

12. *Ground Water (Qualco-Sunlands) Control Act 2000*

12.1	Part 6 - risk management allocation	Qualco Sunlands Ground Water Control Trust has no record of any allocation affecting this title
12.2	section 56 - Notice to pay share of Trust costs, or for unauthorised use of water, in respect of irrigated property	DEW Water Licensing has no record of any notice affecting this title

13. *Heritage Places Act 1993*

13.1	section 14(2)(b) - Registration of an object of heritage significance	Heritage Branch in DEW has no record of any registration affecting this title
13.2	section 17 or 18 - Provisional registration or registration	Heritage Branch in DEW has no record of any registration affecting this title
13.3	section 30 - Stop order	Heritage Branch in DEW has no record of any stop order affecting this title
13.4	Part 6 - Heritage agreement	Heritage Branch in DEW has no record of any agreement affecting this title also Refer to the Certificate of Title
13.5	section 38 - "No development" order	Heritage Branch in DEW has no record of any "No development" order affecting this title

14. *Highways Act 1926*

14.1	Part 2A - Establishment of control of access from any road abutting the land	Transport Assessment Section within DIT has no record of any registration affecting this title

15. *Housing Improvement Act 1940* (repealed)

15.1	section 23 - Declaration that house is undesirable or unfit for human habitation	Contact the Local Government Authority for other details that might apply
15.2	Part 7 (rent control for substandard houses) - notice or declaration	Housing Safety Authority has no record of any notice or declaration affecting this title

16. *Housing Improvement Act 2016*

16.1	Part 3 Division 1 - Assessment, improvement or demolition orders	Housing Safety Authority has no record of any notice or declaration affecting this title
16.2	section 22 - Notice to vacate premises	Housing Safety Authority has no record of any notice or declaration affecting this title
16.3	section 25 - Rent control notice	Housing Safety Authority has no record of any notice or declaration affecting this title

17. *Land Acquisition Act 1969*

17.1	section 10 - Notice of intention to acquire	Refer to the Certificate of Title for any notice of intention to acquire also Contact the Local Government Authority for other details that might apply

18. *Landscape South Australia Act 2019*

18.1	section 72 - Notice to pay levy in respect of costs of regional landscape board	The regional landscape board has no record of any notice affecting this title
18.2	section 78 - Notice to pay levy in respect of right to take water or taking of water	DEW has no record of any notice affecting this title
18.3	section 99 - Notice to prepare an action plan for compliance with general statutory duty	The regional landscape board has no record of any notice affecting this title
18.4	section 107 - Notice to rectify effects of unauthorised activity	The regional landscape board has no record of any notice affecting this title
18.5	section 108 - Notice to maintain watercourse or lake in good condition	The regional landscape board has no record of any notice affecting this title
18.6	section 109 - Notice restricting the taking of water or directing action in relation to the taking of water	DEW has no record of any notice affecting this title
18.7	section 111 - Notice to remove or modify a dam, embankment, wall or other obstruction or object	The regional landscape board has no record of any notice affecting this title
18.8	section 112 - Permit (or condition of a permit) that remains in force	The regional landscape board has no record of any permit (that remains in force) affecting this title
18.9	section 120 - Notice to take remedial or other action in relation to a well	DEW has no record of any notice affecting this title
18.10	section 135 - Water resource works approval	DEW has no record of a water resource works approval affecting this title
18.11	section 142 - Site use approval	DEW has no record of a site use approval affecting this title
18.12	section 166 - Forest water licence	DEW has no record of a forest water licence affecting this title
18.13	section 191 - Notice of instruction as to keeping or management of animal or plant	The regional landscape board has no record of any notice affecting this title
18.14	section 193 - Notice to comply with action order for the destruction or control of animals or plants	The regional landscape board has no record of any notice affecting this title
18.15	section 194 - Notice to pay costs of destruction or control of animals or plants on road reserve	The regional landscape board has no record of any notice affecting this title
18.16	section 196 - Notice requiring control or quarantine of animal or plant	The regional landscape board has no record of any notice affecting this title
18.17	section 207 - Protection order to secure compliance with specified provisions of the Act	The regional landscape board has no record of any notice affecting this title
18.18	section 209 - Reparation order requiring specified action or payment to make good damage resulting from contravention of the Act	The regional landscape board has no record of any notice affecting this title

18.19	section 211 - Reparation authorisation authorising specified action to make good damage resulting from contravention of the Act	The regional landscape board has no record of any notice affecting this title
18.20	section 215 - Orders made by ERD Court	The regional landscape board has no record of any notice affecting this title
18.21	section 219 - Management agreements	The regional landscape board has no record of any notice affecting this title
18.22	section 235 - Additional orders on conviction	The regional landscape board has no record of any notice affecting this title

19. *Land Tax Act 1936*

19.1	Notice, order or demand for payment of land tax	A Land Tax Certificate will be forwarded. If you do not receive the certificate within four (4) working days please contact the RevenueSA Customer Contact Centre on (08) 8226 3750. Clients who have misplaced or not received their certificates and are RevenueSA Online users should log into RevenueSA Online and reprint their certificates www.revenuesaonline.sa.gov.au

20. *Local Government Act 1934* (repealed)

20.1	Notice, order, declaration, charge, claim or demand given or made under the Act	Contact the Local Government Authority for other details that might apply

21. *Local Government Act 1999*

21.1	Notice, order, declaration, charge, claim or demand given or made under the Act	Contact the Local Government Authority for other details that might apply

22. *Local Nuisance and Litter Control Act 2016*

22.1	section 30 - Nuisance or litter abatement notice	Contact the Local Government Authority for other details that might apply

23. *Metropolitan Adelaide Road Widening Plan Act 1972*

23.1	section 6 - Restriction on building work	Transport Assessment Section within DIT has no record of any restriction affecting this title

24. *Mining Act 1971*

24.1	Mineral tenement (other than an exploration licence)	Mineral Tenements in the Department of Energy and Mining has no record of any proclamation affecting this title
24.2	section 9AA - Notice, agreement or order to waive exemption from authorised operations	Contact the vendor for these details
24.3	section 56T(1) - Consent to a change in authorised operations	Contact the vendor for these details
24.4	section 58(a) - Agreement authorising tenement holder to enter land	Contact the vendor for these details
24.5	section 58A - Notice of intention to commence authorised operations or apply for lease or licence	Contact the vendor for these details
24.6	section 61 - Agreement or order to pay compensation for authorised operations	Contact the vendor for these details
24.7	section 75(1) - Consent relating to extractive minerals	Contact the vendor for these details
24.8	section 82(1) - Deemed consent or agreement	Contact the vendor for these details
24.9	Proclamation with respect to a private mine	Mineral Tenements in the Department of Energy and Mining has no record of any proclamation affecting this title

25. *Native Vegetation Act 1991*

25.1	Part 4 Division 1 - Heritage agreement	DEW Native Vegetation has no record of any agreement affecting this title

		also Refer to the Certificate of Title
25.2	section 25C - Conditions of approval regarding achievement of environmental benefit by accredited third party provider	DEW Native Vegetation has no record of any agreement affecting this title also Refer to the Certificate of Title
25.3	section 25D - Management agreement	DEW Native Vegetation has no record of any agreement affecting this title also Refer to the Certificate of Title
25.4	Part 5 Division 1 - Refusal to grant consent, or condition of a consent, to clear native vegetation	DEW Native Vegetation has no record of any refusal or condition affecting this title

26. *Natural Resources Management Act 2004* (repealed)

26.1	section 97 - Notice to pay levy in respect of costs of regional NRM board	The regional landscape board has no record of any notice affecting this title
26.2	section 123 - Notice to prepare an action plan for compliance with general statutory duty	The regional landscape board has no record of any notice affecting this title
26.3	section 134 - Notice to remove or modify a dam, embankment, wall or other obstruction or object	The regional landscape board has no record of any notice affecting this title
26.4	section 135 - Condition (that remains in force) of a permit	The regional landscape board has no record of any notice affecting this title
26.5	section 181 - Notice of instruction as to keeping or management of animal or plant	The regional landscape board has no record of any notice affecting this title
26.6	section 183 - Notice to prepare an action plan for the destruction or control of animals or plants	The regional landscape board has no record of any notice affecting this title
26.7	section 185 - Notice to pay costs of destruction or control of animals or plants on road reserve	The regional landscape board has no record of any notice affecting this title
26.8	section 187 - Notice requiring control or quarantine of animal or plant	The regional landscape board has no record of any notice affecting this title
26.9	section 193 - Protection order to secure compliance with specified provisions of the Act	The regional landscape board has no record of any order affecting this title
26.10	section 195 - Reparation order requiring specified action or payment to make good damage resulting from contravention of the Act	The regional landscape board has no record of any order affecting this title
26.11	section 197 - Reparation authorisation authorising specified action to make good damage resulting from contravention of the Act	The regional landscape board has no record of any authorisation affecting this title

27. *Outback Communities (Administration and Management) Act 2009*

27.1	section 21 - Notice of levy or contribution payable	Outback Communities Authority has no record affecting this title

28. *Phylloxera and Grape Industry Act 1995*

28.1	section 23(1) - Notice of contribution payable	The Phylloxera and Grape Industry Board of South Australia has no vineyard registered against this title. However all properties with greater than 0.5 hectares of planted vines are required to be registered with the board

29. *Planning, Development and Infrastructure Act 2016*

29.1	Part 5 - Planning and Design Code *[**Note** - Do not omit this item. The item and its heading must be included in the statement even if not applicable.]*	Contact the Local Government Authority for the title or other brief description of the zone or subzone in which the land is situated. also Heritage Branch in DEW has no record of a State Heritage Area created prior to 15 January 1994 under the former South Australian Heritage Act 1978 affecting this title also For details of this item, including State Heritage Areas which have been authorised or put under interim effect since 15 January 1994, contact the Local Government Authority also Contact the Local Government Authority for other details that might apply to a place of local heritage value also For details of declared significant trees affecting this title, contact the Local Government Authority also The Planning and Design Code (the Code) is a statutory instrument under the *Planning, Development and Infrastructure Act 2016* for the purposes of development assessment and related matters within South Australia. The Code contains the planning rules and policies that guide what can be developed in South Australia. Planning authorities use these planning rules to assess development applications. To search and view details of proposed statewide code amendments or code amendments within a local government area, please search the code amendment register on the SA Planning Portal: https://plan.sa.gov.au/have_your_say/code-amendments/code_amendment_register or phone PlanSA on 1800 752 664.
29.2	section 127 - Condition (that continues to apply) of a development authorisation *[**Note** - Do not omit this item. The item and its heading must be included in the statement even if not applicable.]*	State Planning Commission in the Department for Housing and Urban Development will respond with details relevant to this item also Contact the Local Government Authority for other details that might apply
29.3	section 139 - Notice of proposed work and notice may require access	Contact the vendor for these details
29.4	section 140 - Notice requesting access	Contact the vendor for these details
29.5	section 141 - Order to remove or perform work	State Planning Commission in the Department for Housing and Urban Development has no record of any order or notice affecting this title also Contact the Local Government Authority for other details that might apply
29.6	section 142 - Notice to complete development	State Planning Commission in the Department for Housing and Urban Development has no record of any order or notice affecting this title also Contact the Local Government Authority for other details that might apply
29.7	section 155 - Emergency order	State Planning Commission in the Department for Housing and Urban Development has no record of any order or notice affecting this title also Contact the Local Government Authority for other details that might apply

29.8	section 157 - Fire safety notice	Building Fire Safety Committee in the Department for Housing and Urban Development has no record of any order or notice affecting this title also Contact the Local Government Authority for other details that might apply
29.9	section 192 or 193 - Land management agreement	Refer to the Certificate of Title
29.10	section 198(1) - Requirement to vest land in a council or the Crown to be held as open space	State Planning Commission in the Department for Housing and Urban Development has no record of any conditions that continue to apply, affecting this title also Contact the Local Government Authority for other details that might apply
29.11	section 198(2) - Agreement to vest land in a council or the Crown to be held as open space	State Planning Commission in the Department for Housing and Urban Development has no record of any conditions that continue to apply, affecting this title also Contact the Local Government Authority for other details that might apply
29.12	Part 16 Division 1 - Proceedings	Contact the Local Government Authority for details relevant to this item also Contact the vendor for other details that might apply
29.13	section 213 - Enforcement notice	State Planning Commission in the Department for Housing and Urban Development has no record of any conditions that continue to apply, affecting this title also Contact the Local Government Authority for other details that might apply
29.14	section 214(6), 214(10) or 222 - Enforcement order	Contact the Local Government Authority for details relevant to this item also State Planning Commission in the Department for Housing and Urban Development has no record of any conditions that continue to apply, affecting this title

30. *Plant Health Act 2009*

30.1	section 8 or 9 - Notice or order concerning pests	Plant Health in PIRSA has no record of any notice or order affecting this title

31. *Public and Environmental Health Act 1987* (repealed)

31.1	Part 3 - Notice	Public Health in DHW has no record of any notice or direction affecting this title also Contact the Local Government Authority for other details that might apply
31.2	*Public and Environmental Health (Waste Control) Regulations 2010 (or 1995)* (revoked) Part 2 - Condition (that continues to apply) of an approval	Public Health in DHW has no record of any condition affecting this title also Contact the Local Government Authority for other details that might apply
31.3	*Public and Environmental Health (Waste Control) Regulations 2010* (revoked) regulation 19 - Maintenance order (that has not been complied with)	Public Health in DHW has no record of any order affecting this title also Contact the Local Government Authority for other details that might apply

32. *South Australian Public Health Act 2011*

32.1	section 66 - Direction or requirement to avert spread of disease	Public Health in DHW has no record of any direction or requirement affecting this title
32.2	section 92 - Notice	Public Health in DHW has no record of any notice affecting this title

		also Contact the Local Government Authority for other details that might apply
32.3	*South Australian Public Health (Wastewater) Regulations 2013* Part 4 - Condition (that continues to apply) of an approval	Public Health in DHW has no record of any condition affecting this title also Contact the Local Government Authority for other details that might apply

33. *Upper South East Dryland Salinity and Flood Management Act 2002 (expired)*

33.1	section 23 - Notice of contribution payable	DEW has no record of any notice affecting this title

34. *Water Industry Act 2012*

34.1	Notice or order under the Act requiring payment of charges or other amounts or making other requirement	**An SA Water Certificate will be forwarded.** **If you do not receive the certificate please contact the SA Water Customer Contact Centre on 1300 650 950** also The Office of the Technical Regulator in DEM has no record of any notice or order affecting this title also Lightsview Re-Water Supply Co Pty Ltd has no record of any notice or order affecting this title. also Robusto Investments Pty. Ltd. trading as Compass Springs has no current record of any notice or order affecting this title. also Alano Utilities Pty. Ltd. has no record of any notice or order affecting this title.

35. *Water Resources Act 1997* (repealed)

35.1	section 18 - Condition (that remains in force) of a permit	DEW has no record of any condition affecting this title
35.2	section 125 (or a corresponding previous enactment) - Notice to pay levy	DEW has no record of any notice affecting this title

36. Other charges

36.1	Charge of any kind affecting the land (not included in another item)	Refer to the Certificate of Title also Contact the vendor for these details also Contact the Local Government Authority for other details that might apply

Other Particulars

Other particulars as identified in Division 2 of the Schedule to Form 1 as described in the *Regulations to the Land and Business (Sale and Conveyancing) Act 1994*

1.	Particulars of transactions in last 12 months	Contact the vendor for these details
2.	Particulars relating to community lot (including strata lot) or development lot	Enquire directly to the Secretary or Manager of the Community Corporation
3.	Particulars relating to strata unit	Enquire directly to the Secretary or Manager of the Strata Corporation
4.	Particulars of building indemnity insurance	Contact the vendor for these details also Contact the Local Government Authority
5.	Particulars relating to asbestos at workplaces	Contact the vendor for these details
6.	Particulars relating to aluminium composite panels	Please note that the audit is limited to classes of buildings, and that this note does not confirm the presence or absence of Aluminium Composite Panelling. Contact the vendor for relevant details.
7.	Particulars relating to court or tribunal process	Contact the vendor for these details
8.	Particulars relating to land irrigated or drained under Irrigation Acts	SA Water will arrange for a response to this item where applicable
9.	Particulars relating to environment protection	Contact the vendor for details of item 2 also EPA (SA) has no record of any particulars relating to items 3, 4 or 5 affecting this title also Contact the Local Government Authority for information relating to item 6
10.	Particulars relating to *Livestock Act, 1997*	Animal Health in PIRSA has no record of any notice or order affecting this title

Additional Information

The following additional information is provided for your information only.
These items are not prescribed encumbrances or other particulars prescribed under the Act.

1.	Pipeline Authority of S.A. Easement	Epic Energy has no record of a Pipeline Authority Easement relating to this title
2.	State Planning Commission refusal	No recorded State Planning Commission refusal
3.	SA Power Networks	SA Power Networks has no interest other than that recorded on the attached notice or registered on the Certificate of Title
4.	South East Australia Gas Pty Ltd	SEA Gas has no current record of a high pressure gas transmission pipeline traversing this property
5.	Central Irrigation Trust	Central Irrigation Trust has no current records of any infrastructure or Water Delivery Rights associated to this title.
6.	ElectraNet Transmission Services	ElectraNet has no current record of a high voltage transmission line traversing this property
7.	Outback Communities Authority	Outback Communities Authority has no record affecting this title
8.	Dog Fence *(Dog Fence Act 1946)*	This title is not subject to Dog Fence rates or the Dog Fence outside levy. Accordingly, the Dog Fence Board holds no current rate or levy-related interest in the property.
9.	Pastoral Board *(Pastoral Land Management and Conservation Act 1989)*	The Pastoral Board has no current interest in this title
10.	Heritage Branch DEW *(Heritage Places Act 1993)*	Heritage Branch in DEW has no record of any World, Commonwealth or National Heritage interest affecting this title
11.	Health Protection Programs – Department for Health and Wellbeing	Health Protection Programs in the DHW has no record of a public health issue that currently applies to this title.

Notices

Notices are printed under arrangement with organisations having some potential interest in the subject land. You should contact the identified party for further details.

Electricity and Telecommunications Infrastructure - Building Restrictions and Statutory Easements (including those related to gas, water and sewage)

Building restrictions

It is an offence under section 86 of the *Electricity Act 1996* to erect a building or structure within a prescribed distance of aerial or underground powerlines. In some, but not all, cases approval may be obtained from the Technical Regulator. Generally, however, land owners must not build, or alter a building or structure, with the result that any part of the resulting building or structure is within the minimum clearance distance required from certain types of powerlines. These building limitations are set out in the *Electricity (General) Regulations 2012* regulations 81 and 82. Purchasers intending to redevelop the property to be purchased should therefore be aware that the restrictions under the *Electricity Act* and *Regulations* may affect how, or if, they are able to redevelop the property.

In addition, if a building or structure is erected in proximity to a powerline of an electricity entity in contravention of the *Electricity Act*, the entity may seek a court order:
a) requiring the person to take specified action to remove or modify the building or structure within a specified period;
b) for compensation from the person for loss or damage suffered in consequence of the contravention; and/or
c) for costs reasonably incurred by the entity in relocating the powerline or carrying out other work.

Contact the Office of the Technical Regulator in DEM on 8226 5500 for further details.

Statutory easements

Statutory easements for purposes such as (and without limitation) electricity, telecommunications, gas, water and sewage, may also exist, but may not be registered or defined on the title for the land.

Separate from the above building restrictions, South Australia's electricity supply and transmission businesses have statutory easements over land where part of the electricity distribution or transmission system was on, above or under the land as at particular dates specified by legislation.

This notice does not necessarily imply that any statutory or other easement exists.

However, where in existence, statutory easements may provide these organisations and businesses (identified in the relevant legislation) with the right of entry, at any reasonable time, to operate, repair, examine, replace, modify or maintain their equipment, to bring any vehicles or equipment on the land for these purposes, and to install, operate and carry out work on any pipelines, electricity or telecommunications cables or equipment that may be incorporated in, or attached to, their equipment (For example, see Clause 2 of Schedule 1 of the *Electricity Corporations (Restructuring and Disposal) Act 1999*; section 48A of the *Electricity Act 1996*).

For further clarification on these matters, please contact the relevant organisations or businesses, such as SA Power Networks' Easements Branch on telephone 8404 5897 or 8404 5894.

If you intend to excavate, develop or subdivide land, it is suggested that you first lodge a 'Dial Before you Dig' enquiry. Dial Before You Dig is a free referral service that provides information on the location of underground infrastructure. Using the Dial Before you Dig service (https://1100.com.au) may mitigate the risk of injury or expense resulting from inadvertent interference with, damage to, or requirement to relocate infrastructure.

***Land Tax Act 1936* and *Regulations* thereunder**

Agents should note that the current owner will remain liable for any additional charge accruing due before the date of this certificate which may be assessed on the land and also that the purchaser is only protected in respect of the tax for the financial year for which this certificate is issued. If the change of ownership will not occur on or before the 30th June, another certificate should be sought in respect of the next financial year or requests for certificate should not be made until after 30th June.

Animal and Plant Control (Agriculture Protection and other purposes) Act 1986* and *Regulations

Agents should note that this legislation imposes a responsibility on a landholder to control and keep controlled proclaimed plants and particular classes of animals on a property.

Information should be obtained from:

- The vendor about the known presence of proclaimed plants or animals on the property including details which the vendor can obtain from records held by the local animal and plant control board
- The local animal and plant control board or the Animal and Plant Control Commission on the policies and priorities relating to the control of any serious proclaimed plants or animals in the area where the property is located.

Landscape South Australia 2019

Water Resources Management - Taking of underground water

Under the provisions of the *Landscape South Australia Act 2019*, if you intend to utilise underground water on the land subject to this enquiry the following apply:

- A well construction permit accompanied by the prescribed fee is required if a well/bore exceeding 2.5 meters is to be constructed. As the prescribed fee is subject to annual review, you should visit the webpage below to confirm the current fee
- A licensed well driller is required to undertake all work on any well/bore
- Work on all wells/bores is to be undertaken in accordance with the *General specification for well drilling operations affecting water in South Australia*.

Further information may be obtained by visiting https://www.environment.sa.gov.au/licences-and-permits/water-licence-and-permit-forms. Alternatively, you may contact the Department for Environment and Water on (08) 8735 1134 or email DEWwaterlicensing@sa.gov.au.

Certificate of Title

Title Reference: CT 6200/70

Status: CURRENT

Edition: 3

Dealings

No Unregistered Dealings and no Dealings completed in the last 90 days for this title

Priority Notices

NIL

Notations on Plan

Lodgement Date	Completion Date	Dealing Number	Description	Status	Plan
07/11/2017	17/11/2017	12823782	SCHEME DESCRIPTION	FILED	C41146
07/11/2017	17/11/2017	12823783	BY-LAWS	FILED	C41146

Registrar-General's Notes

AFFECTED BY C41143

Copyright: www.landservices.com.au/copyright | Privacy: www.landservices.com.au/privacy | Terms of Use: www.landservices.com.au/sailis-terms-of-use

Certificate of Title

Title Reference	CT 6200/70
Status	CURRENT
Easement	NO
Owner Number	19612226
Address for Notices	18 NALIMBA AV PARA VISTA, SA 5093
Area	NOT AVAILABLE

Estate Type

Fee Simple

Registered Proprietor

DARREN SHANE KEEGAN
OF 18 NALIMBA AVENUE PARA VISTA SA 5093
1 / 2 SHARE

ANNA SEGRETO
OF 18 NALIMBA AVENUE PARA VISTA SA 5093
1 / 2 SHARE

Description of Land

LOT 23 SECONDARY COMMUNITY STRATA PLAN 41146
IN THE AREA NAMED KENT TOWN
HUNDRED OF ADELAIDE

Last Sale Details

Dealing Reference	TRANSFER (T) 14006086
Dealing Date	31/03/2023
Sale Price	$630,000
Sale Type	FULL VALUE / CONSIDERATION AND WHOLE OF LAND

Constraints

Encumbrances

Dealing Type	Dealing Number	Beneficiary
MORTGAGE	14006087	BENDIGO & ADELAIDE BANK LTD. (ACN: 068 049 178)

Stoppers

NIL

Valuation Numbers

Valuation Number	Status	Property Location Address
150527081*	CURRENT	Unit 23, 58 KING WILLIAM STREET, KENT TOWN, SA 5067

Copyright: www.landservices.com.au/copyright | Privacy: www.landservices.com.au/privacy | Terms of Use: www.landservices.com.au/sailis-terms-of-use

Notations

Dealings Affecting Title

NIL

Notations on Plan

Lodgement Date	Dealing Number	Descriptions	Status
07/11/2017 16:51	12823782	SCHEME DESCRIPTION	FILED
07/11/2017 16:51	12823783	BY-LAWS	FILED

Registrar-General's Notes

AFFECTED BY C41143

Administrative Interests

NIL

Valuation Record

Valuation Number	150527081*
Type	Site & Capital Value
Date of Valuation	01/01/2026
Status	CURRENT
Operative From	01/07/2018
Property Location	Unit 23, 58 KING WILLIAM STREET, KENT TOWN, SA 5067
Local Government	NORWOOD PAYNEHAM & ST PETERS
Owner Names	DARREN SHANE KEEGAN ANNA SEGRETO
Owner Number	19612226
Address for Notices	18 NALIMBA AV PARA VISTA, SA 5093
Zone / Subzone	UC(Bu) - Urban Corridor (Business)
Water Available	Yes
Sewer Available	Yes
Land Use	1323 - Third Floor Home Unit
Description	3APT CP
Local Government Description	Residential

Parcels

Plan/Parcel	Title Reference(s)
C41146 LOT 23	CT 6200/70

Values

Copyright: www.landservices.com.au/copyright | Privacy: www.landservices.com.au/privacy | Terms of Use: www.landservices.com.au/sailis-terms-of-use

Financial Year	Site Value	Capital Value	Notional Site Value	Notional Capital Value	Notional Type
Current	$92,000	$670,000			
Previous	$88,000	$590,000			

Building Details

Valuation Number	150527081*
Building Style	Not Available
Year Built	Not Available
Building Condition	Not Available
Wall Construction	Not Available
Roof Construction	Not Available
Equivalent Main Area	Not Available
Number of Main Rooms	Not Available

Note – this information is not guaranteed by the Government of South Australia

Copyright: www.landservices.com.au/copyright | Privacy: www.landservices.com.au/privacy | Terms of Use: www.landservices.com.au/sailis-terms-of-use

CERTIFICATE OF RATES AND CHARGES

Issued under Section 187 of the Local Government Act 1999

To: Bertram Form1 Shop Pty Ltd
107 Greenhill Road
UNLEY SA 5061

Date: 15/09/2026

City of Norwood Payneham & St Peters

175 The Parade
Norwood SA 5067

PO Box 204
Kent Town SA 5071

Telephone
8366 4555

Email
townhall@npsp.sa.gov.au

Website
www.npsp.sa.gov.au

Particulars of the Property:	
Assessment No	**120758**
Owner's Name	Ms A Segreto & Mr DS Keegan
Valuation No	150527081*
Property Address	La Verde 23/58 King William Street KENT TOWN 5067
Property Description	Lot: 23 CP: C41146 CT: 6200/70

Particulars of Rates and Charges in the 2026-2027 Financial Year:	
Balance b/forward 2025-2026	$0.00
2026-2027 Rates + Landscape Levy	**$1,426.43**
Plus Legal Fees	$0.00
Plus Fines & Interest	$0.00
Less Concession/Rebate	$0.00
Less Payments	-$358.43
Plus Property Related Debts	
Balance Now Due and Payable	**$1,068.00**
Settlement via BPay	**Biller Code: 3251** **Reference: 1207584**

2026-2027 Rates including Landscape Levy	**$1,426.43**
2026-2027 Capital Value	**$670,000**

The 2nd Quarter Instalment for the 2026-2027 financial year will be due 4 December 2026

Notes for your information:

- The next date for Fines and Interest to be calculated is 10 October 2026.
- If Balance Due above is *Nil*, the rates have been paid to 30 June 2027.
- Upon settlement of the property, the total balance to 30 June 2027 is required to be paid to the Council. Action to recover unpaid rates will be taken against the owner of the property at the time of declaration of rates.
- A fine of 2% will be imposed on any current Rate not paid by the due date and interest at the prescribed rate will be added each month on unpaid arrears.
- This certificate relates only to the abovementioned assessment. If other assessments are included at the same address (eg: tenancies/shops) additional certificates will only be issued upon payment of additional fees.

Mario Barone
CHIEF EXECUTIVE OFFICER

Member League of Historical Cities

100% Australian Made Recycled Paper

Community Well-being is...
Social Equity
Cultural Vitality
Economic Prosperity
Environmental Sustainability

City of Norwood Payneham & St Peters

City of Norwood Payneham & St Peters
Head Office: **175 The Parade, Norwood**
Mailing Address: **PO Box 204, KENT TOWN SA 5071**

Telephone **(08) 8366 4555**

Property Information and Particulars

provided pursuant to Section 12 of the

Land and Business (Sale and Conveyancing) Act 1994

Certificate Date: 15/09/2026
Certificate No: 28376

To: Bertram Form1 Shop Pty Ltd
107 Greenhill Road
UNLEY SA 5061

Details of Property Referred To:

Rates Assessment Number	:	120758 4
Valuer General Number	:	150527081*
Owner Details	:	Ms A Segreto & Mr DS Keegan
Property Address	:	La Verde 23/58 King William Street KENT TOWN 5067
Property Description	:	Lot: 23 CP: C41146 CT: 6200/70
Hundred	:	Adelaide
Ward	:	St Peters/Kent Town Ward

The below information has been prepared pursuant to the *Land and Business (Sale and Conveyancing) Act 1994* (**LBSC Act**) and *Land and Business (Sale and Conveyancing) Regulations 2025* (**LBSC Regulations**) on the basis of the Council's records and, except as otherwise noted below, in reliance on particular information supplied by the Department for Housing and Urban Development. The Council does not make any guarantee as to the completeness, reliability or accuracy of the information supplied by the Department for Housing and Urban Development.

Where 'YES' has been indicated in column 2, this is intended to indicate only that the item in column 1 is applicable. The Council makes no representation as to whether this item will be discharged or satisfied prior to or at settlement.

Where 'N/A' has been indicated in column, this is intended to indicate only that the Council does not have records of the item in column 1. You may wish to make your own further enquiries, including of the administrative unit of the Public Service that is, under a Minister, responsible for the administration of the *Planning, Development and Infrastructure Act 2016*.

Terms used in this document may be as defined in the LBSC Act and LBSC Regulations.

Prescribed Encumbrances for La Verde 23/58 King William Street KENT TOWN 5067

Column 1 Prescribed encumbrance	Column 2 Other particulars required
Development Act 1993 (repealed)	
section 42—Condition (that continues to apply) of a development authorisation	Date of authorisation: 25 May 2016 Name of relevant authority that granted authorisation: The City of Norwood Payneham & St Peters Condition(s) of authorisation: See attached Decision Notification Form(s) **DA 155/754/2014**
Repealed Act conditions	
Condition (that continues to apply) of an approval or authorisation granted under the *Building Act 1971* (repealed), the *City of Adelaide Development Control Act 1976* (repealed), the *Planning Act 1982* (repealed) or the *Planning and Development Act 1967* (repealed)	Nature of condition(s): **N/A**
Planning, Development and Infrastructure Act 2016	
Part 5 – Planning and Design Code	Title or other brief description of zone, subzone and overlay in which the land is situated (as shown in the Planning and Design Code): **(Refer to PlanSA Section 7 extract report)** Is there a State heritage place on the land or is the land situated in a State heritage area? **NO** Is the land designated as a local heritage place? **NO** Is there a tree or stand of trees declared in Part 10 of the Planning and Design Code to be a significant tree or trees on the land? **NO** Is there a current amendment to the Planning and Design Code released for public consultation by a designated entity on which consultation is continuing or on which consultation has ended but whose proposed amendment has not yet come into operation? **YES** For information on any proposed Code Amendments which may interest you, please refer to the PlanSA Website: https://code.plan.sa.gov.au
Section 127 - Condition (that continues to apply) of a development authorisation	**(Refer to PlanSA Section 7 extract report)**

Column 1 Prescribed encumbrance	Column 2 Other particulars required
Development Act 1993 (repealed)	
section 50(1)—Requirement to vest land in a council or the Crown to be held as open space	**N/A**
section 50(2)—Agreement to vest land in a council or the Crown to be held as open space	**N/A**
section 55—Order to remove or perform work	**N/A**
section 56—Notice to complete development	**N/A**
section 57—Land management agreement	**N/A**
section 69—Emergency order	**N/A**
section 71—Fire safety notice	**N/A**
section 84—Enforcement notice	**N/A**
section 85(6), 85(10) or 106—Enforcement order	**N/A**
Part 11 Division 2—Proceedings	**N/A**
Fire and Emergency Services Act 2005	
section 105F (or section 56 or 83 (repealed))—Notice to take action to prevent outbreak or spread of fire	**N/A**
Food Act 2001	
section 44—Improvement notice	**N/A**
section 46—Prohibition order	**N/A**
Housing Improvement Act 1940 (repealed)	
section 23—declaration that house is undesirable or unfit for human habitation	**N/A**

Column 1 Prescribed encumbrance	Column 2 Other particulars required
Part 7 (rent control for substandard houses) – Notice or declaration	**N/A**
Land Acquisition Act 1969	
Section 10 – Notice of intention to acquire	**N/A**
Local Government Act 1934 (repealed)	
Notice, order, declaration, charge, claim or demand given or made under the Act	**N/A**
Local Government Act 1999	
Notice, order, declaration, charge, claim or demand given or made under the Act	**N/A**
Local Nuisance and Litter Control Act 2016	
Section 30 – Nuisance or litter abatement notice	**N/A**
Planning, Development and Infrastructure Act 2016	
section 141 – Order to remove or perform work	**N/A**
section 142 – Notice to complete development	**N/A**
section 155 – Emergency order	**N/A**
section 157 – Fire safety notice	**N/A**
Section 192 or 193 – Land management agreement	**(Refer to PlanSA Section 7 extract report)**
section 198(1) – Requirement to vest land in a council or the Crown to be held as open space	**N/A**
section 198(2) – Agreement to vest land in a council or the Crown to be held as open space	**N/A**
Part 16 Division 1 – Proceedings	**N/A**

Column 1 Prescribed encumbrance	Column 2 Other particulars required
section 213 – Enforcement notice	**N/A**
section 214(6), 214(10) or 222-Enforcement order	**N/A**
Public and Environmental Health Act 1987 (repealed)	
Part 3—Notice	**N/A**
Public and Environmental Health (Waste Control) Regulations 2010 (or 1995) (revoked) Part 2—Condition (that continues to apply) of an approval	**N/A**
Public and Environmental Health (Waste Control) Regulations 2010 (revoked) regulation 19—Maintenance order (that has not been complied with)	**N/A**
South Australian Public Health Act 2011	
Section 92-Notice	**N/A**
South Australian Public Health (Wastewater) Regulations 2013 Part 4-Condition (that continues to apply) of an approval	**N/A**
Other charges	
Charge of any kind affecting the land (not included in another item)	Person or body in whose favour charge exists: **N/A** Nature of charge: Amount of charge (if known):

Particulars of Building Indemnity Insurance

Note—Building indemnity insurance is not required for—

(a) domestic building work for which approval under the *Planning, Development and Infrastructure Act 2016,* the repealed *Development Act 1993* or the repealed *Building Act 1971* is or was not required; or

(b) minor domestic building work (see section 3 of the *Building Work Contractors Act 1995*); or

(c) domestic building work commenced before 1 May 1987; or

(d) building work in respect of which an exemption from the application of Division 3 of Part 5 of the *Building Work Contractors Act 1995* applies under the *Building Work Contractors Regulations 2011*; or

(e) building work in respect of which an exemption from the application of Division 3 of Part 5 of the *Building Work Contractors Act 1995* has been granted under section 45 of that Act.

Details of building indemnity insurance still in existence for building work on the land:

Building Indemnity Insurance is required….**N/A** (refer above note):

1 Name(s) of person(s) insured:……...

2 Name of insurer:……..

3 Limitations on the liability of the insurer:……..

4 Name of builder:……...

5 Builder's licence number:……

6 Date of issue of insurance:…….

7 Description of insured building work:……

……

……...

Exemption from holding insurance:

If particulars of insurance are not given, has an exemption been granted under section 45 of the *Building Work Contractors Act 1995* from the requirement to hold an insurance policy in accordance with Division 3 of Part 5 of that Act?

N/A

If **YES**, give details:

(a) Date of the exemption:……..

(b) Name of builder granted the exemption:……..

(c) Licence number of builder granted the exemption:……

(d) Details of building work to which the exemption applies: ……

……

……

(e) Details of conditions (if any) to which the exemption is subject: ……...

……

……

Particulars relating to Environment Protection

Further information held by councils

Does the council hold details of any development approvals relating to—

(a) commercial or industrial activity at the land; or

(b) a change in the use of the land or part of the land (within the meaning of the *Development Act 1993* or the *Planning, Development and Infrastructure Act 2016)*?

NO

Note—

The question relates to information that the council for the area in which the land is situated may hold. If the council answers "YES" to the question, it will provide a description of the nature of each development approved in respect of the land. The purchaser may then obtain further details from the council (on payment of any fee fixed by the council). However, it is expected that the ability to supply further details will vary considerably between councils.

A "YES" answer to paragraph (a) of the question may indicate that a ***potentially contaminating activity*** has taken place at the land (see sections 103C and 103H of the *Environment Protection Act 1993*) and that assessments or remediation of the land may be required at some future time.

It should be noted that—

(a) the approval of development by a council does not necessarily mean that the development has taken place;

(b) the council will not necessarily be able to provide a complete history of all such development that has taken place at the land.

This statement is made the **22 September 2026**

MARIO BARONE
CHIEF EXECUTIVE OFFICER

Data Extract for Section 7 search purposes

Valuation ID 150527081*

Data Extract Date: 22/09/2026

Important Information

This Data Extract contains information that has been input into the Development Application Processing (DAP) system by either the applicant or relevant authority for the development for which approval was sought under the Planning, Development and Infrastructure Act 2016. The Department for Housing and Urban Development does not make any guarantees as to the completeness, reliability or accuracy of the information contained within this Data Extract and councils should verify or confirm the accuracy of the information in the Data Extract in meeting their obligations under the Land and Business (Sale and Conveyancing) Act 1994.

Parcel ID: C41146 FL23

Certificate Title: CT6200/70

Property Address: UNIT 23 58 KING WILLIAM ST KENT TOWN SA 5067

Zones

Urban Corridor (Business) (UC(Bu))

Subzones

No

Zoning overlays

Overlays

Airport Building Heights (Regulated) (All structures over 110 metres)

The Airport Building Heights (Regulated) Overlay seeks to ensure building height does not pose a hazard to the operation and safety requirements of commercial and military airfields.

Affordable Housing

The Affordable Housing Overlay seeks to ensure the integration of a range of affordable dwelling types into residential and mixed use development.

Design

The Design Overlay seeks to ensure significant development positively contributes to the liveability, durability and sustainability of the built environment through high-quality design.

Hazards (Flooding - General)

The Hazards (Flooding - General) Overlay seeks to minimise impacts of general flood risk through appropriate siting and design of development.

Noise and Air Emissions

The Noise and Air Emissions Overlay seeks to protect new noise and air quality sensitive development from adverse impacts of noise and air emissions.

Prescribed Wells Area

The Prescribed Wells Area Overlay seeks to ensure sustainable water use in prescribed wells areas.

Regulated and Significant Tree

The Regulated and Significant Tree Overlay seeks to mitigate the loss of regulated trees through appropriate development and redevelopment.

Traffic Generating Development

The Traffic Generating Development Overlay aims to ensure safe and efficient vehicle movement and access along urban transport routes and major urban transport routes.

Is the land situated in a State Heritage Place/Area

No

Open the SA Heritage Places Database Search tool to find the locations' Heritage Place Details.

http://maps.sa.gov.au/heritagesearch/HeritageSearchLocation.aspx

Is the land designated as a Local Heritage Place

No

Open the SA Heritage Places Database Search tool to find the locations' Heritage Place Details.

http://maps.sa.gov.au/heritagesearch/HeritageSearchLocation.aspx

Is there a tree or stand of trees declared in Part 10 of the Planning and Design Code (the Code) to be a significant tree or trees on the land? (Note: there may be regulated and/or significant trees on the land that are not listed in the Code - see below).

No

Under the Planning, Development and Infrastructure Act 2016 (the Act), a tree may be declared as a significant tree in the Code, or it may be declared as a significant or regulated tree by the Planning, Development and Infrastructure (General) Regulations 2017. Under the Act, protections exist for trees declared to be significant and/or regulated trees. Further information regarding protected trees can be found on the PlanSA website: https://plan.sa.gov.au/

Open the Online Planning and Design Code to browse the full Code and Part 10 - Significant Trees for more information.

https://code.plan.sa.gov.au/

Associated Development Authorisation Information

A Development Application cannot be enacted unless the Development Authorisation for Development Approval has been granted.

No

Land Management Agreement (LMA)

No

DECISION NOTIFICATION FORM

South Australia - Regulations Under the Development Act, 1993 - Regulation 42

FOR DEVELOPMENT APPLICATION **NUMBER:** 155/754/2014
DATED: 26/09/2014
REGISTERED ON: 26/09/2014

TO:	F.A. MAMAC Pty Ltd C/- Morgan & Hansen Builders 341 Payneham Road MARDEN SA 5070

LOCATION OF PROPOSED DEVELOPMENT
54- 60 King William Street KENT TOWN 5067 Lot 173 FP 211769,Adelaide CT 5720/848

NATURE OF PROPOSED DEVELOPMENT
Demolition of existing buildings and structures including one Local Heritage Place, removal of a Regulated Tree; and construction of a mixed use development comprising 54 residential dwellings, 3 SoHo.products, a retail store and commercial offices, together with above ground car parking and related works

In respect of this proposed development you are informed that :

NATURE OF DECISION	DECISION	DATE	NO. OF CONDITIONS
DAC -DEVELOPMENT PLAN CONSENT	Granted	31/07/2014	9
BUILDING RULES CONSENT – STAGE ONE DEMOLITION OF EXISTING BUILDINGS AND STRUCTURES INCLUDING ONE LOCAL HERITAGE PLACE, REMOVAL OF A REGULATED TREE	Certified	29/07/2015	1 as issued by Private Certifier
BUILDING RULES CONSENT – STAGE TWO SUBSTRUCTURE, CIVIL & SERVICES WORKS	Certified	02/10/2015	Nil as issued by Private Certifier
BUILDING RULES CONSENT – STAGE THREE SUPERSTRUCTURE INCLUDING LEVEL 3 SLAB	Certified	30/10/2015	1 as issued by Private Certifier
BUILDING RULES CONSENT – STAGE FOUR CLT STRUCTURAL ELEMENTS, EXTERNAL FABRIC, INTERNAL FITOUT & BALANCE OF EXTERNAL WORKS	Certified	19/05/2016	3 as issued by Private Certifeir
DEVELOPMENT APPROVAL STAGE FOUR	APPROVED		

Reasons for this decision, any conditions imposed and the reasons for imposing those conditions are set out in the attached sheet.

The classification assigned to this building is Class 2, 5, 6 & 7a, for the purposes of Section 66 and Regulation 82 of the Development Act, 1993.

Pursuant to Regulation 48 this approval is valid for twelve (12) months. Substantial commencement or a request for an extension of time shall be undertaken during this period or the Approval will lapse. Council requires 24 hours notice of commencement of this Development, please ring 8366 4569 or 8366 4576

Date of Decision: **25 May 2016**
☐ **DAP or Delegate**

Signed:
☒ **Council Chief Executive Officer or Delegate**

☐ **Private Certifier**

Date: **25 May 2016**
☒ **Sheets Attached**

DEVELOPMENT APPLICATION NUMBER:	**155/754/2014**
APPLICANT:	**F.A. MAMAC Pty Ltd**
LOCATION:	**54 - 60 King William Street KENT TOWN 5067**
PROPOSED DEVELOPMENT:	**Demolition of existing buildings and structures including one Local Heritage Place, removal of a Regulated Tree; and construction of a mixed use development comprising 54 residential dwellings, 3 SoHo products, a retail store and commercial offices, together with above ground car parking and related works**
DECISION	**Development Approved Stage 4**
DATE OF DECISION:	**10/11/2015**

REASONS FOR DECISION

Consent is granted, as the proposed development is considered to accord sufficiently with the provisions of the Development Plan.

The following conditions have been imposed to reasonably ensure that the development will not impair the orderly and proper planning of the locality or detrimentally affect the amenity of the locality, having particular regard to the Principles of Development Control applicable to such a use in the locality.

DEVELOPMENT PLAN CONSENT

Conditions of Consent

1. Except where minor amendments may be required by other relevant Acts, or by conditions imposed by this application, the development shall be established in strict accordance with the details and plans, as submitted in Development Application 155/M002/14 including:

Plans by Proske Architects

Plan No.	Revision	Date
13.071.PL01.A	A	2 June 2014
13.071.PL02.A	A	4 June 2014
13.071.PL03.B	B	12 June 2014
13.071.PL04.A	A	4 June 2014
13.071.PL05.A	A	4 June 2014
13.071.PL06.A	A	4 June 2014
13.071.PL07.A	A	4 June 2014
13.071.PL08.A	A	4 June 2014
13.071.PL09.A	A	2 June 2014
13.071.PL010.A	A	4 June 2014
13.071.PL011.A	A	4 June 2014

Reports / Correspondence

- Planning Assessment Report in support of the development (June 2014) – Final Version, Revision 2B.

2. The acoustic attenuation measurers recommended in the Resonate report, ref A1149192, dated 12 May 2014, forming part of this consent shall be undertaken within the Development to the reasonable satisfaction of the Development Assessment Commission. Such acoustic measures shall be made operational prior to the occupation or use of the Development and any additional measurers implemented as required when plant and equipment details are finalised.

3. Mechanical plant or equipment, shall be designed, sited and screened to minimise noise impact on adjacent premises or properties to the satisfaction of the Development Assessment Commission.

4. A Construction Environment Management Plan (CEMP) shall be prepared and implemented in accordance with current industry standards – including the EPA publication "Environmental Management of On-site Remediation" – to minimise environmental harm and disturbance during construction.

   The management plan must incorporate, without being limited to, the following matters:
   4.1 air quality, including odour and dust
   4.2 surface water including erosion and sediment control
   4.3 soils, including fill importation, stockpile management and prevention of soil contamination
   4.4 groundwater, including prevention of groundwater contamination
   4.5 noise
   4.6 occupational health and safety

   For further information relating to what Site Contamination is, refer to the EPA Guideline: "Site Contamination – what is site contamination?": www.epa.sa.gov.au/pdfs/guidesc what.pdf

5. All stormwater design and construction shall be in accordance with Australian Standards and recognised engineering best practices to ensure that stormwater does not adversely affect any adjoining property or public road.

6. The proposed car parking layout shall be designed and constructed to conform to the Australian Standard 2890.1.2004 for Off-Street Parking Facilities; Australian Standard 2890.6-2009 Parking facilities.

7. That on-site Bicycle Parking facilities shall be designed in accordance with Australian Standard 2890.3-1993 and the AUSTROADS, Guide to Traffic Engineering Practice Part 14 – Bicycles.

8. Prior to Provisional Building Rules consent, the local heritage place house shall be measured (plans and elevations) and photographically recorded at the applicant's expense to the satisfaction of Council and a copy be provided to Council.

9. The proposed landscaping shall be established and maintained to the satisfaction of the Development Assessment Commission.

BUILDING RULES CONSENT

Conditions of Consent

See attached conditions and notes per the Certifiers Building Rules Consent dated 19/06/2016.

ADVISORY NOTE(S)

a) The approval does not include any signage (other than directional), which would need to be the subject of a separate application to the relevant planning authority.

b) The applicant is reminded of its general environmental duty, as required by Section 25 of the Environment Protection Act 1993, to take all reasonable and practical measurers to ensure that the activities on the whole site, including during construction, do not pollute the environment in a way which causes or may cause environmental harm.

c) Any information sheets, guidelines documents, codes of practice, technical bulletins etc. that are referenced in this response can be accessed on the following web site: http://www.epa.sa.gov.au/pub.html

d) The applicant must ensure there is no objection from any of the public utilities in respect of underground or overhead services and any alterations that may be required are to be at the applicant's expense.

e) As work is being undertaken on or near the boundary, the applicant should ensure that the boundaries are clearly defined, by a Licensed Surveyor, prior to the commencement of any building work.

f) The emission of noise from the premises is subject to control under the Environment Protection Act and Regulations 1993 and the applicant (or person with the benefit of this consent) should comply with those requirements.

g) That the air conditioning or air extraction plant or ducting shall be screened such that no nuisance or loss of amenity is caused to residents and users of properties in the locality to the reasonable satisfaction of the Development Assessment Commission.

h) The development must be substantially commenced within three (3) years of the date of this Notification, unless this period has been extended by the Development Assessment Commission.

i) An application for an authorisation pursuant to Section 22.1 of the Local Government Act will need to be lodged and approved by the City of Norwood Payneham and St Peters for any encroachments.

j) You are also advised that any act or work authorised or required by this Notification unless this period is extended by the Commission.

k) You will require a fresh consent before commencing or continuing the development if you are unable to satisfy these requirements.

l) You have a right of appeal against the conditions which have been imposed on this Development Plan Consent or Development Approval. Such an appeal must be lodged at the Environment, Resources and Development Court within two months of the day on which you receive this notice or such longer time as the Court may allow. Please contact the Court if you wish to appeal. The Court is located in the Sir Samuel Way Building, Victoria Square, Adelaide, (telephone number 8204 0300).

Mark Thomson
MANAGER DEVELOPMENT ASSESSMENT

25 May 2016

City of
Norwood
Payneham
& St Peters

IMPORTANT NOTICE

- The developer or building owner shall provide 20mm rubble on the site prior to work commencing, in areas of vehicular traffic to ensure compliance with the requirements of the **Environmental Protection Agency**. It is to be placed in such a way to minimise the amount of soil (mud and dust) transferred over public areas and into the street.

- **Boundary survey prior to commencing construction**
  The person proposing to undertake the work shall ensure that no part of the proposed building work is to overhand the boundary of the site. It is strongly recommended that a Licensed Surveyor be engaged to undertake a survey before work commences to establish the location of the boundary.

- The owner of any building to be erected or altered which is used for food preparation, is obliged to obtain consent from the **Eastern Health Authority**. (phone 8132 3600)

- Important: This approval does not imply compliance with the Electricity Act, 1996 (in relation to minimum clearance distances of power lines adjacent to buildings), the (State) Equal Opportunity Act, 1995, the Occupational Health, Safety and Welfare Act 1991, or with Commonwealth Disability Discrimination Act, 1993 or with any regulations under those Acts. It is the responsibility of the owner and the person erecting the building to ensure compliance with same.

- Building work adjacent to street boundaries is required to be provided with a **hoarding** and a license for the hoarding shall be obtained from the Council. Contact 8366 4525.

Your attention is drawn to the provisions of Section 60 of the Development Act 1993 which provide that:

Pursuant to Section 60 of the Development Act 1993, work that affects stability:

1. Where a building owner proposes to carry out building work of a prescribed nature that is, in accordance with the regulations to be treated for the purposed of this section as building work that affects the stability of other land or premises ("the affected land or premises") the following provisions apply:

   (a) The building owner must, at least 28 days before the building work is commenced, cause to be served on the owner of the affected land or premises a notice of intention to perform the building work and the nature of the work; and
   (b) The building owner must (in addition to complying with any condition imposed by a relevant authority at the time of approval) take such precautions as may be prescribed to protect the affected land or premises, carry out such other building work in relation to that land or premises as that adjoining owner is authorised by the regulations to require; and
   (c) Nothing in this section relieves the building owner from liability for injury resulting from the performance of any building work.

2. A building owner who fails to comply with a provision under subsection (1) IS GUILTY OF AN OFFENCE.

Penalty: **$4,000 (maximum penalty)**

'uilding owner may apply to the Court for a determination of what proportion (if any) of the expense incurred by the building owner in the rformance of the building work requested by the owner of affected land or premises under subsection (1) should be borne by the owner of that and or premises, and the building owner may recover an amount determined by the Court from the owner of the affect land or premises as a debt.

Your attention is drawn to the provisions of Regulation 75 of the Development Regulations 1993 which provides that in respect of building work affecting other land

> It must be assumed in designing, and assessing the design of a building that it is possible that an excavation which intersects (but does not extend beyond) a notional plane extending downwards from the boundary at the site at a slope of 1 vertical to 2 horizontal from a point 600 millimetres below natural ground level at the boundary could be undertaken on an adjoining site.

Regulation 75(2) provides that, work of the following nature is prescribed as building work which is to be treated for the purposes of that section as building work that affects the stability of other land or premises, namely:

- an excavation which intersects a notional plane extending downwards at a slope of 1 vertical to 2 horizontal from a point 600 millimetres below natural ground level at a boundary with an adjoining site (as depicted by the example shown as figure 1 in schedule 15); or
- an excavation which intersects any notional plane extending downwards at a slope of 1 vertical to 2 horizontal from a point 600 millimetres below natural ground level at a boundary with an adjoining site (as depicted by the example shown as figure 2 in schedule 15); or
- any fill which is within 600 millimetres of an adjoining site, other than where the fill is not greater than 200 millimetres in depth (or height) and is for landscaping, gardening or other similar purposes.

For the purposes of section 60 (1) (b) of the Act, the owner of the affected land or premises may require the building owner to shore up any excavation or to underpin, stabilise or otherwise strengthen the foundations of any building to the extent specified by a professional engineer engaged by the owner of the affected land or premises.

City of
Norwood
Payneham
& St Peters

The building owner must pay the reasonable costs of obtaining a report and plans and specifications from a professional engineer for the purposes of sub-regulation (3).

In sub regulations (3) and (4):
'professional engineer' means a person who is:

(a) a corporate member of the Institution of Engineers, Australia who has appropriate experience and competence in the field of civil and geotechnical engineering; or a person who is registered on the National Professional Engineers Register administered by the institution of Engineers, Australia and who has appropriate experience and competence in the field of civil and geotechnical engineering.

- **Section 223 of the Local Government Act 1999** provides that, where damage to Council roads, footpaths or kerbing occurs as a result of the development, the owner / applicant shall be responsible for the cost of repairs to the damage.

- A separate application to the Council **Works and Technical Services Department** is required for any installation of or modification to stormwater drains, underground electrical services or crossovers etc beyond the property alignment. Contact 8360 9000.

- The applicant shall at his/her own expense in all things carry out all alterations to existing inverts, watertables, footpaths pavements or other works in the public roads adjacent to the subject land necessary to give effect to the demolition of buildings or structures, siteworks and the construction of the buildings or structures and other works forming part of the development approval to the reasonable satisfaction of the Council and shall at his /her own expense in all things repair and make good any damage to any such inverts, kerbs, watertables, footpaths, pavements, or other such works to the reasonable satisfaction of the Council.

- An **approved toilet** privy is to be sensitively located on the site prior to any building work commencing. The privy should be suitably braced against overturning. No long drop toilets shall be used on site, only chemical toilets or toilets connected to the sewer shall be used.

- A minimum standard for **refuse containers** on a building site to restrain 'blowable' materials is to be either;
  (a) a commercial type removable 'SKIP' type container (provided by a waste removal company) of adequate size for the building project (min 1.5m) with a top closable lid, or
  (b) a suitable prefabricated rectangular (or square) enclosure of robust construction (ie steel sheeting material or steel mesh F72 or better - not chicken or bird wire) and located so as not to be demolished by vehicles off loading.

- The applicant is encouraged to install and maintain a rainwater tank to the dwelling(s) hereby granted authorisation.

City of
Norwood
Payneham
& St Peters

Building Notifications – Important New Requirements from July 2012

As from July 2012, the State Government has introduced fines of $500 for failure to notify the Council at certain stages of construction. Please read the following important information to ensure that you and those acting on your behalf are fulfilling your/their obligations.

At What Stages of Construction is Notification to the Council Required?
In accordance with Regulation 74(1) of the *Development Regulations 2008*, notifications to the Council are required at the following stages of construction, insofar as they are applicable to the building work being undertaken:

(a) 1 business day's notice of the intended commencement of building work on the site; and
(b) 1 business day's notice of completion of structural steel reinforcement for concrete footings or other floors; and
(c) 1 business day's notice of the completion of all roof framing forming part of the building work (including top and bottom chord restraints, bracing and tie-downs)*; and
(d) 1 business day's notice of the completion of all masonry walls; and
(e) 1 business day's notice of completion of the building work.

* Where notice is given in relation to the completion of roof framing, the person who gives the notice must, within 1 business day after the notice is given, provide to the council a duly completed **supervisor's checklist** relating to the roof framing, signed by a registered building work supervisor, being a registered building work supervisor who has undertaken any training required and recognised under a scheme (if any) approved by the Minister.

A person **must not conceal** any completed roof framing until after the expiration of 2 clear business days after the notice of completion of roof framing has been received by the council.

Who is Required to Give the Notification?
The licensed building work contractor who is carrying out the work or who is in charge of carrying out the work, or if there is no such licensed building work contractor, the building owner is required to give notice to the Council.

What Structures are Exempt from the Notification Requirements?
Class 10 buildings under the Building Code are exempt from the notification requirements, other than where the Class 10 building is attached to any part of the roof framing of a building of another class. Transportable buildings are also exempt.

How Can Notification be Given to the Council?
The required notices may be given—
(a) by email transmission to buildingnotice@npsp.sa.gov.au; or
(b) by telephoning the Council's Development Assessment team on 08 8366 4530; or
(c) by faxing it to the council on 08 8332 6338; or
(d) by posting it to the council at 175 The Parade, Norwood SA 5067, ensuring that the date received by the Council accords with the notice requirements; or
(e) by hand delivering a written notice with a duly authorised officer of the council.

In either case, the notices must include the name, address and telephone number of the persons who are proposed to sign Parts A and B of the Statement of Compliance under Schedule 19A (if relevant).

What Penalties Apply for Failure to Notify?
A person who breaches any of the requirements outlined in this information sheet is guilty of an offence with an expiation fee of $500 or a maximum penalty of $10 000.

20 Greenhill Rd Wayville SA 5034
PO Box 109 Goodwood SA 5034
T 08 8273 0888 **F** 08 8273 0800
katnichdodd.com.au

ABN 44 303 725 328

Katnich Dodd
Building Certifiers
Knowledgeable
Dependable

PC53169.4

DECISION NOTIFICATION FORM

Development No: **155/M002/14 REV 2** Dated: 15/04/2015 Registered On:

RECEIVED
FRONT COUNTER
23 MAY 2016
CITY OF NORWOOD
PAYNEHAM & ST PETERS

To: **FA MAMAC PTY LTD**
c/- MORGAN & HANSEN BUILDERS
341 PAYNEHAM ROAD
MARDEN SA 5070

LOCATION OF PROPOSED DEVELOPMENT

House **50-60** Lot No: Street: **KING WILLIAM STREET** Suburb: **KENT TOWN**
Section Volume: Folio: Hundred:

NATURE OF PROPOSED DEVELOPMENT

Demolition of existing buildings and structures including one Local Heritage place, removal of a Regulated Tree and construction of a mixed use development comprising 54 residential dwellings, 7 SOHO products, a retail store and commercial offices together with above ground car parking and related works – Minor variation lodged 31 March 2015 pursuant to regulation 47A of the Development Regulations 2008
Consent Stage 4 – CLT structural elements, external Fabric, internal fit-out & balance of external works.

In respect of this proposed development you are informed that:

NATURE OF CONSENT	CONSENT GRANTED	NUMBER OF CONDITIONS	CONSENT REFUSED	NOT APPLICABLE
Development Plan Consent	----	----	----	----
Land Division	----	----	----	----
Land Division (strata)	----	----	----	----
Building Rules Consent	**19/5/16**	**3**	----	----
Public Space	To be issued by Council in relation to the street canopies	----	----	----
Other	N/A	----	----	----
DEVELOPMENT APPROVAL	---	----	----	----

If applicable, the details of the **building classification** and the approved **number of occupants** under the Building Code are attached.

If there were third party representations, any consent/approval or consent/approval with conditions does not operate until the periods specified in the Act have expired. Reasons for this decision, any conditions imposed and the reasons for imposing those conditions are set out on the attached sheet.

No work can commence on this development unless a Development Approval has been obtained. If one or more consents have been granted on this Notification Form, you must not start any site works or building work or change the use of land until you have also received notification of a Development Approval.

Signed:

Date: 19 May, 2016

(i) **Private Certifier**
(4) Sheets Attached

Katnich Dodd
Building Certifiers
Knowledgeable
Dependable

PC53169.4

DEVELOPMENT ACT, 1993
SECTION 42
CONDITIONS OF BUILDING RULES CONSENT

BUILDING WORK:	Demolition of existing buildings and structures including one Local Heritage place, removal of a Regulated Tree and construction of a mixed use development comprising 54 residential dwellings, 7 SOHO products, a retail store and commercial offices together with above ground car parking and related works – Minor variation lodged 31 March 2015 pursuant to regulation 47A of the Development Regulations **Consent Stage 4 – CLT structural elements, external Fabric, internal fit-out & balance of external works.**
SITE ADDRESS:	54-60 KING WILLIAM STREET, KENT TOWN
APPLICANT:	MORGAN & HANSEN BUILDERS
OWNER:	FA MAMAC PTY LTD
CLASSIFICATION:	2, 5, 6 & 7a
RISE IN STOREYS:	5
TYPE OF CONSTRUCTION:	A
DEVELOPMENT APPLN:	155/M002/14 Rev 2
ISSUED BY:	Development Assessment Commission

RECEIVED
FRONT COUNTER
23 MAY 2015
CITY OF NORWOOD
PAYNEHAM & ST PETERS

CONDITIONS

1..AECOM shall inspect and certify that the CLT has been installed in accordance with the structural design intent.

Regulation 88

2..The Fire Engineer (BCA) shall inspect the as-built construction and certify that the assumptions made in the Fire Engineering Report have been implemented

Regulation 88

3..Braille and tactile signage (as noted in Sect 8 of AS1428.1-2009) shall be provided to identify:

- sanitary facilities (able bodied and accessible), and
- each door provided with an exit sign highlighting the word "Exit" and the associated "Floor Level"

all in accordance with BCA Clause D3.6

BCA-Part D3

Notes:

The proprietary type materials and products as specified either on the architectural plans or specification are to be selected and installed in accordance with the manufacturers recommendations and relevant standards.

The certified drawings/ documents will be issued by the Council with the notification of development approval.

This consent does not include tenancy fit-outs which shall be the subject of separate applications.

SCHEDULE OF ESSENTIAL SAFETY PROVISIONS: Regulation 76 requires that the relevant authority on granting building rules consent, issue a schedule that specifies the essential safety provisions for the building and the standards or requirements for the

maintenance and testing in respect each of those essential safety provisions set out in Minister's Specification SA 76. The items to be inspected or tested are detailed on the attached schedule.

Proof of maintenance must be provided to Council each calendar year by the building owner.

CERTIFICATE OF OCCUPANCY: A new Certificate of Occupancy **is required** to be issued in relation to the proposed development. Katnich Dodd will, before granting a certificate of occupancy, require:

1 evidence that all conditions of consent have been satisfied
2 a *Statement of Compliance* **Part A** from the licensed building work contractor who carried out the relevant work or who was in charge of carrying out the relevant work; or if there is no such licensed building work contractor- from a registered building work supervisor or private certifier all in accordance with the attached pro-forma, and also **Part B** which must be signed by the owner of the relevant land, or by someone acting on his or her behalf;
3 a certificate of compliance for each essential safety provision, in the appropriate **Form 2** under Schedule 16, signed by the installer of the safety provision, or where the installer is a company, signed by the manager responsible for the installation work (refer attached pro-forma);
4 where a building is required by the Building Rules to be equipped with a booster assembly for use by fire fighters; or to have installed a fire alarm that transmits a signal to a fire station; and facilities for fire detection, fire fighting or the control of smoke must be installed in the building pursuant to an approval under the Act, the "wet" and/or "dry" report(s) from the SA Fire Services as to whether those facilities have been installed and operate satisfactorily.

PLEASE ENSURE THAT THESE FORMS ARE PASSED ON TO THE OWNER & BUILDER.

Wet area details including floor grades, set-downs and water resistant surfaces shall comply with AS3740–2010 and BCA Clauses SA F1.7 and BCA F1.7 & Table F1.7

IMPORTANT: This report does not imply compliance with the Electricity Act, 1996 as amended (building within prescribed distances of adjacent power lines) or the regulations thereunder (including Regulations prescribed for purposes of Section 86), the Work Health & Safety Act 2012, the (State) Equal Opportunity Act, 1984, or with the Commonwealth Disability Discrimination Act, 1993 as amended or with any of the regulations under those Acts. It is the responsibility of the owner and the person erecting the building to ensure compliance with same.

Katnich Dodd
Building Surveyors

.....
Ian Dodd 19 May, 2016
Certificate of Registration as a Private Certifier No. 005

©

City of
Norwood
Payneham
& St Peters

Building Notifications – Important New Requirements from July 2012

As from July 2012, the State Government has introduced fines of $500 for failure to notify the Council at certain stages of construction. Please read the following important information to ensure that you and those acting on your behalf are fulfilling your/their obligations.

At What Stages of Construction is Notification to the Council Required?
In accordance with Regulation 74(1) of the *Development Regulations 2008*, notifications to the Council are required at the following stages of construction, insofar as they are applicable to the building work being undertaken:

(a) 1 business day's notice of the intended commencement of building work on the site; and
(b) 1 business day's notice of completion of structural steel reinforcement for concrete footings or other floors; and
(c) 1 business day's notice of the completion of all roof framing forming part of the building work (including top and bottom chord restraints, bracing and tie-downs)*; and
(d) 1 business day's notice of the completion of all masonry walls; and
(e) 1 business day's notice of completion of the building work.

* Where notice is given in relation to the completion of roof framing, the person who gives the notice must, within 1 business day after the notice is given, provide to the council a duly completed **supervisor's checklist** relating to the roof framing, signed by a registered building work supervisor, being a registered building work supervisor who has undertaken any training required and recognised under a scheme (if any) approved by the Minister.
A person **must not conceal** any completed roof framing until after the expiration of 2 clear business days after the notice of completion of roof framing has been received by the council.

Who is Required to Give the Notification?
The licensed building work contractor who is carrying out the work or who is in charge of carrying out the work, or if there is no such licensed building work contractor, the building owner is required to give notice to the Council.

What Structures are Exempt from the Notification Requirements?
Class 10 buildings under the Building Code are exempt from the notification requirements, other than where the Class 10 building is attached to any part of the roof framing of a building of another class. Transportable buildings are also exempt.

How Can Notification be Given to the Council?
The required notices may be given—
(a) by email transmission to buildingnotice@npsp.sa.gov.au; or
(b) by telephoning the Council's Development Assessment team on 08 8366 4530; or
(c) by faxing it to the council on 08 8332 6338; or
(d) by posting it to the council at 175 The Parade, Norwood SA 5067, ensuring that the date received by the Council accords with the notice requirements; or
(e) by hand delivering a written notice with a duly authorised officer of the council.
In either case, the notices must include the name, address and telephone number of the persons who are proposed to sign Parts A and B of the Statement of Compliance under Schedule 19A (if relevant).

What Penalties Apply for Failure to Notify?
A person who breaches any of the requirements outlined in this information sheet is guilty of an offence with an expiation fee of $500 or a maximum penalty of $10 000.

20 Greenhill Rd Wayville SA 5034
PO Box 109 Goodwood SA 5034
T 08 8273 0888 **F** 08 8273 0800
katnichdodd.com.au

ABN 44 303 725 328

Katnich Dodd
Building Certifiers
Knowledgeable
Dependable

PC 53169.3

DECISION NOTIFICATION FORM

Development No: **155/M002/14 REV 2** Dated: 15/04/2015 Registered On:

To:
FA MARMAC PTY LTD
c/- MORGAN & HANSEN BUILDERS
341 PAYNEHAM ROAD
MARDEN SA 5070

LOCATION OF PROPOSED DEVELOPMENT

House **50-60** Lot No: Street: **KING WILLIAM STREET** Suburb: **KENT TOWN**
Section Volume: Folio: Hundred:

NATURE OF PROPOSED DEVELOPMENT

Demolition of existing buildings and structures including one Local Heritage place, removal of a Regulated Tree and construction of a mixed use development comprising 54 residential dwellings, 3 SoHo products, a retail store and commercial offices together with above ground car parking and related works – Minor variation lodged 31 March 2015 pursuant to regulation 47A of the Development Regulations 2008
Consent Stage 3 – Superstructure including Level 3 slab

In respect of this proposed development you are informed that:

NATURE OF CONSENT	CONSENT GRANTED	NUMBER OF CONDITIONS	CONSENT REFUSED	NOT APPLICABLE
Development Plan Consent	----	----	----	----
Land Division	----	----	----	----
Land Division (strata)	----	----	----	----
Building Rules Consent	**30/10/15**	**1**	----	----
Public Space	N/A	----	----	----
Other	N/A	----	----	----
DEVELOPMENT APPROVAL	---	----	----	----

If applicable, the details of the **building classification** and the approved **number of occupants** under the Building Code are attached.

If there were third party representations, any consent/approval or consent/approval with conditions does not operate until the periods specified in the Act have expired. Reasons for this decision, any conditions imposed and the reasons for imposing those conditions are set out on the attached sheet.

No work can commence on this development unless a Development Approval has been obtained. If one or more consents have been granted on this Notification Form, you must not start any site works or building work or change the use of land until you have also received notification of a Development Approval.

Signed:

Date: 30 October, 2015

RECEIVED
FRONT COUNTER
- 2 NOV 2015
CITY OF NORWOOD
PAYNEHAM & ST PETERS

(1) **Private Certifier**
(1) Sheets Attached

Katnich Dodd
Building Certifiers
Knowledgeable
Dependable

PC 53169.3

DEVELOPMENT ACT, 1993
SECTION 42
CONDITIONS OF BUILDING RULES CONSENT

BUILDING WORK:	Demolition of existing buildings and structures including one Local Heritage place, removal of a Regulated Tree and construction of a mixed use development comprising 54 residential dwellings, 3 SoHo products, a retail store and commercial offices together with above ground car parking and related works – Minor variation lodged 31 March 2015 pursuant to regulation 47A of the Development Regulations **Consent Stage 3 – Superstructure including Level 3 slab**
SITE ADDRESS:	54-60 KING WILLIAM STREET, KENT TOWN
APPLICANT:	MORGAN & HANSEN BUILDERS
OWNER:	FA MARMAC PTY LTD
CLASSIFICATION:	2, 5, 6 & 7a
RISE IN STOREYS:	5
TYPE OF CONSTRUCTION:	A
DEVELOPMENT APPLN:	155/M002/14 Rev 2
ISSUED BY:	Development Assessment Commission

CONDITIONS

1..A table shall be supplied summarizing the required Fire Resistance Levels for the structural steel members and the method of achieving those FRLs. Details shall be approved prior to such work being commenced.
BCA-Part C1

Notes:
This consent does not include the following works which shall be the subject of a separate consents:

- **Stage 4 –** CLT structural elements & external fabric & internal fit-out & balance of external works.

The certified drawings/ documents will be issued by the Council with the notification of development approval.

IMPORTANT: This report does not imply compliance with the Electricity Act, 1996 as amended (building within prescribed distances of adjacent power lines) or the regulations thereunder (including Regulations prescribed for purposes of Section 86), the Work Health & Safety Act 2012, the (State) Equal Opportunity Act, 1984, or with the Commonwealth Disability Discrimination Act, 1993 as amended or with any of the regulations under those Acts. It is the responsibility of the owner and the person erecting the building to ensure compliance with same.

Katnich Dodd
Building Surveyors

.....
Ian Dodd 30 October, 2015
Certificate of Registration as a Private Certifier No. 005

City of
Norwood
Payneham
& St Peters

Building Notifications – Important New Requirements from July 2012

As from July 2012, the State Government has introduced fines of $500 for failure to notify the Council at certain stages of construction. Please read the following important information to ensure that you and those acting on your behalf are fulfilling your/their obligations.

At What Stages of Construction is Notification to the Council Required?
In accordance with Regulation 74(1) of the *Development Regulations 2008*, notifications to the Council are required at the following stages of construction, insofar as they are applicable to the building work being undertaken:

(a) 1 business day's notice of the intended commencement of building work on the site; and
(b) 1 business day's notice of completion of structural steel reinforcement for concrete footings or other floors; and
(c) 1 business day's notice of the completion of all roof framing forming part of the building work (including top and bottom chord restraints, bracing and tie-downs)*; and
(d) 1 business day's notice of the completion of all masonry walls; and
(e) 1 business day's notice of completion of the building work.

* Where notice is given in relation to the completion of roof framing, the person who gives the notice must, within 1 business day after the notice is given, provide to the council a duly completed **supervisor's checklist** relating to the roof framing, signed by a registered building work supervisor, being a registered building work supervisor who has undertaken any training required and recognised under a scheme (if any) approved by the Minister.

A person **must not conceal** any completed roof framing until after the expiration of 2 clear business days after the notice of completion of roof framing has been received by the council.

Who is Required to Give the Notification?
The licensed building work contractor who is carrying out the work or who is in charge of carrying out the work, or if there is no such licensed building work contractor, the building owner is required to give notice to the Council.

What Structures are Exempt from the Notification Requirements?
Class 10 buildings under the Building Code are exempt from the notification requirements, other than where the Class 10 building is attached to any part of the roof framing of a building of another class. Transportable buildings are also exempt.

w Can Notification be Given to the Council?
The required notices may be given—
(a) by email transmission to buildingnotice@npsp.sa.gov.au; or
(b) by telephoning the Council's Development Assessment team on 08 8366 4530; or
(c) by faxing it to the council on 08 8332 6338; or
(d) by posting it to the council at 175 The Parade, Norwood SA 5067, ensuring that the date received by the Council accords with the notice requirements; or
(e) by hand delivering a written notice with a duly authorised officer of the council.

In either case, the notices must include the name, address and telephone number of the persons who are proposed to sign Parts A and B of the Statement of Compliance under Schedule 19A (if relevant).

What Penalties Apply for Failure to Notify?
A person who breaches any of the requirements outlined in this information sheet is guilty of an offence with an expiation fee of $500 or a maximum penalty of $10 000.

20 Greenhill Rd Wayville SA 5034
PO Box 109 Goodwood SA 5034
T 08 8273 0888 **F** 08 8273 0800
katnichdodd.com.au

ABN 44 303 725 328

Katnich Dodd
Building Certifiers
Knowledgeable
Dependable

PC 53169.2

DECISION NOTIFICATION FORM

Development No: **155/M002/14 REV 2**	Dated: 15/04/2015	Registered On:

To: **FA MARMAC PTY LTD**
c/- MORGAN & HANSEN BUILDERS
341 PAYNEHAM ROAD
MARDEN SA 5070

LOCATION OF PROPOSED DEVELOPMENT

House **50-60** Lot No: Street: **KING WILLIAM STREET** Suburb: **KENT TOWN**
Section Volume: Folio: Hundred:

NATURE OF PROPOSED DEVELOPMENT

Demolition of existing buildings and structures including one Local Heritage place, removal of a Regulated Tree and construction of a mixed use development comprising 54 residential dwellings, 3 SoHo products, a retail store and commercial offices together with above ground car parking and related works – Minor variation lodged 31 March 2015 pursuant to regulation 47A of the Development Regulations 2008
Consent Stage 2 – Substructure, Civil & Services works

In respect of this proposed development you are informed that:

NATURE OF CONSENT	CONSENT GRANTED	NUMBER OF CONDITIONS	CONSENT REFUSED	NOT APPLICABLE
Development Plan Consent	----	----	----	----
Land Division	----	----	----	----
Land Division (strata)	----	----	----	----
Building Rules Consent	**2/10/15**	**NIL**	----	----
Public Space	N/A	----	----	----
Other	N/A	----	----	----
DEVELOPMENT APPROVAL	---	----	----	----

If applicable, the details of the **building classification** and the approved **number of occupants** under the Building Code are attached.

If there were third party representations, any consent/approval or consent/approval with conditions does not operate until the periods specified in the Act have expired. Reasons for this decision, any conditions imposed and the reasons for imposing those conditions are set out on the attached sheet.

No work can commence on this development unless a Development Approval has been obtained. If one or more consents have been granted on this Notification Form, you must not start any site works or building work or change the use of land until you have also received notification of a Development Approval.

Signed:

Date: 2 October, 2015

(1) **Private Certifier**
(2) Sheets Attached

Katnich Dodd
Building Certifiers
Knowledgeable
Dependable

PC 53169.2

DEVELOPMENT ACT, 1993
SECTION 42
CONDITIONS OF BUILDING RULES CONSENT

BUILDING WORK:	Demolition of existing buildings and structures including one Local Heritage place, removal of a Regulated Tree and construction of a mixed use development comprising 54 residential dwellings, 3 SoHo products, a retail store and commercial offices together with above ground car parking and related works – Minor variation lodged 31 March 2015 pursuant to regulation 47A of the Development Regulations **Consent Stage 2 – Substructure, Civil & Services works**
SITE ADDRESS:	54-60 KING WILLIAM STREET, KENT TOWN
APPLICANT:	MORGAN & HANSEN BUILDERS
OWNER:	FA MARMAC PTY LTD
CLASSIFICATION:	2, 5, 6 & 7a
RISE IN STOREYS:	5
TYPE OF CONSTRUCTION:	A
DEVELOPMENT APPLN:	155/M002/14 Rev 2
ISSUED BY:	Development Assessment Commission

UNCONDITIONAL CONSENT

Notes:
This consent does not include the following works which shall be the subject of a separate consents:

- **Stage 3 –** Superstructure including Level 3 slab
- **Stage 4 –** CLT structural elements & external fabric & internal fit-out & balance of external works.

The certified drawings/ documents will be issued by the Council with the notification of development approval.
For building work prescribed in regulation 75, the building owner, must, at least 28 days before the building work is commenced cause to be served on the owner of the affected land or premises a notice of intention to perform the building work and the nature of that work, as required by Section 60

AS3660.1- 'Termite Management - New Building Work', sets out methods for minimising the risk to new buildings from damage to their structural members by subterranean termites by deterring concealed entry by termites from the soil to the building. A termite barrier system constructed in accordance with this standard can not prevent termite attack, as barriers may be bridged or breached. Where termites bridge barriers the evidence may be detected during inspections which need to be carried out at intervals not exceeding 12 months to reduce the risk of termite damage A durable notice shall be permanently fixed to the building in a prominent location such as a meter box or the like indicating the method of protection; and the date of installation of the system; and where a chemical barrier is used, its life expectancy as listed on the National Registration Authority label; and the need to maintain and inspect the system on a regular basis.

IMPORTANT: This report does not imply compliance with the Electricity Act, 1996 as amended (building within prescribed distances of adjacent power lines) or the regulations thereunder (including Regulations prescribed for purposes of Section 86), the Work Health & Safety Act 2012, the (State) Equal Opportunity Act, 1984, or with the Commonwealth

Safety Act 2012, the (State) Equal Opportunity Act, 1984, or with the Commonwealth Disability Discrimination Act, 1993 as amended or with any of the regulations under those Acts. It is the responsibility of the owner and the person erecting the building to ensure compliance with same.

Katnich Dodd
Building Surveyors



.....
Ian Dodd 2 October, 2015
Certificate of Registration as a Private Certifier No. 005

City of
Norwood
Payneham
& St Peters

Building Notifications – Important New Requirements from July 2012

As from July 2012, the State Government has introduced fines of $500 for failure to notify the Council at certain stages of construction. Please read the following important information to ensure that you and those acting on your behalf are fulfilling your/their obligations.

At What Stages of Construction is Notification to the Council Required?
In accordance with Regulation 74(1) of the *Development Regulations 2008*, notifications to the Council are required at the following stages of construction, insofar as they are applicable to the building work being undertaken:

(a) 1 business day's notice of the intended commencement of building work on the site; and
(b) 1 business day's notice of completion of structural steel reinforcement for concrete footings or other floors; and
(c) 1 business day's notice of the completion of all roof framing forming part of the building work (including top and bottom chord restraints, bracing and tie-downs)*; and
(d) 1 business day's notice of the completion of all masonry walls; and
(e) 1 business day's notice of completion of the building work.

* Where notice is given in relation to the completion of roof framing, the person who gives the notice must, within 1 business day after the notice is given, provide to the council a duly completed **supervisor's checklist** relating to the roof framing, signed by a registered building work supervisor, being a registered building work supervisor who has undertaken any training required and recognised under a scheme (if any) approved by the Minister.

A person **must not conceal** any completed roof framing until after the expiration of 2 clear business days after the notice of completion of roof framing has been received by the council.

Who is Required to Give the Notification?
The licensed building work contractor who is carrying out the work or who is in charge of carrying out the work, or if there is no such licensed building work contractor, the building owner is required to give notice to the Council.

What Structures are Exempt from the Notification Requirements?
Class 10 buildings under the Building Code are exempt from the notification requirements, other than where the Class 10 building is attached to any part of the roof framing of a building of another class. Transportable buildings are also exempt.

How Can Notification be Given to the Council?
The required notices may be given—
(a) by email transmission to buildingnotice@npsp.sa.gov.au; or
(b) by telephoning the Council's Development Assessment team on 08 8366 4530; or
(c) by faxing it to the council on 08 8332 6338; or
(d) by posting it to the council at 175 The Parade, Norwood SA 5067, ensuring that the date received by the Council accords with the notice requirements; or
(e) by hand delivering a written notice with a duly authorised officer of the council.

In either case, the notices must include the name, address and telephone number of the persons who are proposed to sign Parts A and B of the Statement of Compliance under Schedule 19A (if relevant).

What Penalties Apply for Failure to Notify?
A person who breaches any of the requirements outlined in this information sheet is guilty of an offence with an expiation fee of $500 or a maximum penalty of $10 000.

20 Greenhill Rd Wayville SA 5034
PO Box 109 Goodwood SA 5034
T 08 8273 0888 F 08 8273 0800
katnichdodd.com.au

ABN 44 303 725 328

Katnich Dodd
Building Certifiers
Knowledgeable
Dependable

PC 53169.1

DECISION NOTIFICATION FORM

Development No: **155/M002/14** Dated: 15/04/2015 Registered On:

To:
FA MARMAC PTY LTD
C/- MORGAN & HANSEN BUILDERS
341 PAYNEHAM ROAD
MARDEN SA 5070

LOCATION OF PROPOSED DEVELOPMENT

House **50-60** Lot No: Street: **KING WILLIAM STREET** Suburb: **KENT TOWN**
Section Volume: Folio: Hundred:

NATURE OF PROPOSED DEVELOPMENT

Demolition of existing buildings and structures including one Local Heritage place, removal of a Regulated Tree and construction of a mixed use development comprising 54 residential dwellings, 3 SoHo products, a retail store and commercial offices together with above ground car parking and related works – Minor variation lodged 31 March 2015 pursuant to regulation 47A of the Development Regulations 2008
STAGE 1 APPROVAL - Demolition of existing buildings and structures including one Local Heritage place, removal of a Regulated Tree

In respect of this proposed development you are informed that:

NATURE OF CONSENT	CONSENT GRANTED	NUMBER OF CONDITIONS	CONSENT REFUSED	NOT APPLICABLE
Development Plan Consent	----	----	----	----
Land Division	----	----	----	----
Land Division (strata)	----	----	----	----
Building Rules Consent	**29/7/15**	**1**	----	----
Public Space	N/A	----	----	----
Other	N/A	----	----	----
DEVELOPMENT APPROVAL	---	----	----	----

If applicable, the details of the **building classification** and the approved **number of occupants** under the Building Code are attached.

If there were third party representations, any consent/approval or consent/approval with conditions does not operate until the periods specified in the Act have expired. Reasons for this decision, any conditions imposed and the reasons for imposing those conditions are set out on the attached sheet.

No work can commence on this development unless a Development Approval has been obtained. If one or more consents have been granted on this Notification Form, you must not start any site works or building work or change the use of land until you have also received notification of a Development Approval.

Signed:



Date: 29 July, 2015

(KI) **Private Certifier**
(1) Sheets Attached

Katnich Dodd
Building Certifiers
Knowledgeable
Dependable

PC 53169.1

DEVELOPMENT ACT, 1993
SECTION 42
CONDITIONS OF BUILDING RULES CONSENT

BUILDING WORK:	Demolition of existing buildings and structures including one Local Heritage place, removal of a Regulated Tree and construction of a mixed use development comprising 54 residential dwellings, 3 SoHo products, a retail store and commercial offices together with above ground car parking and related works – Minor variation lodged 31 March 2015 pursuant to regulation 47A of the Development Regulations 2008 **STAGE 1 APPROVAL - Demolition of existing buildings and structures including one Local Heritage place, removal of a Regulated Tree**
SITE ADDRESS:	54-60 KING WILLIAM STREET, KENT TOWN
APPLICANT:	MORGAN & HANSEN BUILDERS
OWNER:	FA MARMAC PTY LTD
DEVELOPMENT APPLN:	155/M002/14
ISSUED BY:	DAC

CONDITIONS

1..The method of demolition and means of ensuring safety and avoiding damage to neighbouring property during demolition shall be in accordance with the provisions of Australian Standard 2601-2001 "The Demolition of Structures"

- the BCA does not contain deemed to satisfy provisions for demolition works
- the applicant should liaise separately with the relevant authority and the SafeWork SA division of DPTI.

Reg 15 & Schedule 5

Notes:

The certified drawings/ documents will be issued by the Council with the notification of development approval.

Fire precautions must be taken during construction in accordance with BCA-E1.9. The builder must also ensure, once the method of construction has been determined, that the design of the building/structure adequately accommodates the anticipated *construction activity actions.*

The BCA does not contain deemed-to-satisfy provisions for demolition works.
The applicant should liaise separately with the relevant authority and the Safe-Work SA business unit of DPTI.

The person proposing to undertake building work on land (or who is in charge of such work) is warned of their obligation to give the Council notice at stages prescribed in Regulation 74

For building work prescribed in regulation 75, the building owner, must, at least 28 days before the building work is commenced cause to be served on the owner of the affected land or premises a notice of intention to perform the building work and the nature of that work, as required by Section 60.

IMPORTANT: This report does not imply compliance with the Electricity Act, 1996 as amended (building within prescribed distances of adjacent power lines) or the regulations thereunder (including Regulations prescribed for purposes of Section 86), the Work Health & Safety Act 2012, the (State) Equal Opportunity Act, 1984, or with the Commonwealth Disability Discrimination Act, 1993 as amended or with any of the regulations under those Acts. It is the responsibility of the owner and the person erecting the building to ensure compliance with same.

Katnich Dodd
Building Surveyors

.....
Vic Barone 29 July, 2015
Certificate of Registration as a Private Certifier No. 057

©

SA Water

Account Number	L.T.O Reference	Date of issue	Agent No.	Receipt No.
150527081*	CT620070	15/9/2026	7836	2818406

BERTRAM FORM 1 SHOP PTY LTD
GPO BOX 448
ADELAIDE SA 5001
form1@bertramform1shop.com

Section 7/Elec

Certificate of Water and Sewer Charges & Encumbrance Information

Property details:

Customer: A SEGRETO & D S KEEGAN
Location: U23 58 KING WILLIAM ST KENT TOWN LT23 C41146
Description: 3APT CP **Capital Value:** $ 670 000
Rating: Residential

Periodic charges

Raised in current years to 30/9/2026

				$
		Arrears as at: 30/6/2026	:	0.00
Water main available:	1/7/2018	Water rates	:	88.00
Sewer main available:	1/7/2018	Sewer rates	:	103.85
		Water use	:	0.00
		SA Govt concession	:	0.00
		Recycled Water Use	:	0.00
		Service Rent	:	0.00
		Recycled Service Rent	:	0.00
		Other charges	:	11.00
		Goods and Services Tax	:	0.00
		Amount paid	:	0.00
		Balance outstanding	:	202.85

Degree of concession: 00.00%
Recovery action taken: RECOVERY NOTICE

Next quarterly charges: Water supply: 88.00 Sewer: 103.85 Bill: 7/10/2026

This account has no meter of its own but is supplied from account no 15 05270 58 8.

The Water Use apportionment option is Nil.

If your property was constructed before 1929, it's recommended you request a property interest report and internal 'as constructed' sanitary drainage drawing to understand any specific requirements relating to the existing arrangements.

As constructed sanitary drainage drawings can be found at https://maps.sa.gov.au/drainageplans/.

SA Water has no record of an Encumbrance on this property as at the date of issue of this certificate.

Next action may be the forwarding of the debt details to a collection agency for recovery of the outstanding rates (no costs incurred at this stage). Recovery action may include a visit to the property and commencement of legal action. If further information is required please contact SA Waters Collection Unit on telephone (08) 7424 1560.

South Australian Water Corporation

Name:
A SEGRETO & D S KEEGAN

Water & Sewer Account
Acct. No.: **150527081***

Amount: _____

Address:
U23 58 KING WILLIAM ST KENT TOWN
LT23 C41146

Payment Options

EFT

EFT Payment

Bank account name:	SA Water Collection Account
BSB number:	065000
Bank account number:	10622859
Payment reference:	150527081*

BPAY

Biller code: 8888
Ref: 15052708110

Telephone and Internet Banking — BPAY®

Contact your bank or financial institution to make this payment from your cheque, savings, debit, credit card or transaction account. More information at bpay.com.au

Paying online

Pay online at www.sawater.com.au/paynow for a range of options. Have your account number and credit card details to hand.

Paying by phone

Call 1300 650 870 and pay by phone using your Visa/Mastercard 24/7.

SA Water account number: 150527081*

RevenueSA
DEPARTMENT OF TREASURY AND FINANCE

ABN 19 040 349 865
Emergency Services Funding Act 1998

CERTIFICATE OF EMERGENCY SERVICES LEVY PAYABLE

The Emergency Services Levy working for all South Australians

The details shown are current as at the date of issue.

PIR Reference No: 2818406

DATE OF ISSUE
15/09/2026

BERTRAM FORM 1 SHOP PTY LTD
GPO BOX 448
ADELAIDE SA 5001

ENQUIRIES:
Tel: (08) 8372 7534
Email: contactus@revenuesa.sa.gov.au

OWNERSHIP NUMBER
19612226

OWNERSHIP NAME
D KEEGAN & A SEGRETO

PROPERTY DESCRIPTION
U23 58 KING WILLIAM ST / KENT TOWN SA 5067 / LT 23

ASSESSMENT NUMBER	TITLE REF. (A "+" indicates multiple titles)	CAPITAL VALUE	AREA / FACTOR	LAND USE / FACTOR
			R4	RE
150527081*	CT 6200/70	$670,000.00	1.000	0.400

LEVY DETAILS:

FINANCIAL YEAR
2026-2027

FIXED CHARGE	$	50.00
+ VARIABLE CHARGE	$	212.25
- REMISSION	$	125.45
- CONCESSION	$	0.00
+ ARREARS / - PAYMENTS	$	0.00
= AMOUNT PAYABLE	$	136.80

Please Note: If a concession amount is shown, the validity of the concession should be checked prior to payment of any outstanding levy amount. The expiry date displayed on this Certificate is the last day an update of this Certficate will be issued free of charge. **It is not the due date for payment.**

EXPIRY DATE **14/12/2026**

Government of South Australia

See overleaf for further information

DETACH AND RETURN THE PAYMENT REMITTANCE ADVICE WITH YOUR PAYMENT

RevenueSA
DEPARTMENT OF TREASURY AND FINANCE

CERTIFICATE OF EMERGENCY SERVICES LEVY PAYABLE

PAYMENT REMITTANCE ADVICE

OWNERSHIP NUMBER
19612226

OWNERSHIP NAME
D KEEGAN & A SEGRETO

ASSESSMENT NUMBER
150527081*

AMOUNT PAYABLE
$136.80

AGENT NUMBER
100019503

AGENT NAME
BERTRAM FORM 1 SHOP PTY LTD

EXPIRY DATE
14/12/2026

+70240995120022> +001571+ <0551140434> <0000013680> +444+

Please Note:

Please check that the property details shown on this Certificate are correct for the land being sold.

The amount payable on this Certificate is accurate as at the date of issue.

This Certificate is only valid for the financial year shown.

> If the change of ownership will occur in the following financial year, you must obtain another Certificate after 30 June.

Payment should be made as part of the settlement process.

> The amount payable on this Certificate must be paid in full even if only a portion of the subject land is being sold. RevenueSA cannot apportion the ESL.
>
> If the amount payable is not paid in full, the purchaser may become liable for all of the outstanding ESL as at the date of settlement.

The owner of the land as at 12:01am on 1 July in the financial year of this Certificate will remain liable for any additional ESL accrued before the date of this Certificate, even if the amount payable on this Certificate has been paid.

Provision of this Certificate does not relieve the land owner of their responsibility to pay their Notice of ESL Assessment by the due date.

If the owner of the subject land is receiving an ESL pensioner concession but was not living in the property as their principal place of residence as at 12:01am on 1 July of the current financial year, or is now deceased, you must contact RevenueSA prior to settlement.

For more information:

Visit:	www.revenuesa.sa.gov.au
Email:	contactus@revenuesa.sa.gov.au
Phone:	(08) 8372 7534

PAYMENT OPTIONS FOR THIS CERTIFICATE SHOWN BELOW

Biller Code: 456285 **Ref: 7024099512** Contact your bank or financial institution to make this payment from your cheque, savings, debit, credit card or transaction account. More info: www.bpay.com.au ® Registered to BPAY Pty Ltd ABN 69 079 137 518	**To pay via the internet go to:** www.revenuesaonline.sa.gov.au	Send your cheque or money order, made payable to the **Community Emergency Services Fund**, along with this **Payment Remittance Advice** to: **Please refer below.** **Revenue SA** **Locked Bag 555** **ADELAIDE SA 5001**

ACTION REQUIRED: In line with the Commonwealth Government's cheque phase-out, RevenueSA will stop accepting cheque payments after 30 June 2027. To ensure a smooth transition, we encourage you to switch to one of the other payment options listed above.

RevenueSA
DEPARTMENT OF TREASURY AND FINANCE
ABN 19 040 349 865
Land Tax Act 1936

CERTIFICATE OF LAND TAX PAYABLE

This form is a statement of land tax payable pursuant to Section 23 of the *Land Tax Act 1936*. The details shown are current as at the date of issue.

PIR Reference No: 2818406

DATE OF ISSUE
15/09/2026

BERTRAM FORM 1 SHOP PTY LTD
GPO BOX 448
ADELAIDE SA 5001

ENQUIRIES:
Tel: (08) 8372 7534
Email: contactus@revenuesa.sa.gov.au

OWNERSHIP NAME
D KEEGAN & A SEGRETO

FINANCIAL YEAR
2026-2027

PROPERTY DESCRIPTION
U23 58 KING WILLIAM ST / KENT TOWN SA 5067 / LT 23

ASSESSMENT NUMBER	TITLE REF. (A "+" indicates multiple titles)	TAXABLE SITE VALUE	AREA
150527081*	CT 6200/70	$92,000.00	0.0000 HA

DETAILS OF THE LAND TAX PAYABLE FOR THE ABOVE PARCEL OF LAND:

CURRENT TAX	**$**	0.00	**SINGLE HOLDING**	**$**	0.00
- DEDUCTIONS	**$**	0.00			
+ ARREARS	**$**	0.00			
- PAYMENTS	**$**	0.00			
= AMOUNT PAYABLE	**$**	**0.00**			

Please Note: If the Current Tax details above indicate a Nil amount, the property may be subject to an Exemption. This exemption should be validated prior to settlement. In order to ensure indemnity for the purchaser of this land, full payment of the amount payable is required:

ON OR BEFORE **14/12/2026**

Government of South Australia

See overleaf for further information

DETACH AND RETURN THE PAYMENT REMITTANCE ADVICE WITH YOUR PAYMENT

RevenueSA
DEPARTMENT OF TREASURY AND FINANCE
Land Tax Act 1936

CERTIFICATE OF LAND TAX PAYABLE

PAYMENT REMITTANCE ADVICE

No payment is required on this Certificate

Please Note:

Please check that the property details shown on this Certificate are correct for the land being sold.

This Certificate is only valid for the financial year shown.

If the change of ownership will occur in the following financial year, you must obtain another Certificate after 30 June.

Payment should be made as part of the settlement process.

The amount payable on this Certificate must be paid in full even if only a portion of the subject land is being sold. RevenueSA cannot apportion the land tax.

If the amount payable is not paid in full on or before the due date shown on this Certificate, the purchaser will not be released from liability of the whole amount of the land tax outstanding as at the date of settlement.

The owner of the land as at midnight on 30 June immediately before the financial year of this Certificate will remain liable for any additional land tax accrued before the date of this Certificate, even if the amount payable on this Certificate has been paid.

The amount payable on this Certificate is the land tax payable at the date of issue. However, land tax for a particular financial year may be reassessed at any time, changing the amount payable.

Should a reassessment occur after this Certificate has been paid in full, the purchaser will remain indemnified and will not be responsible for payment of the new land tax payable amount. The owner at the beginning of the relevant financial year will be responsible for payment of any additional land tax payable.

Should a reassessment occur after this Certificate has been issued but not paid in full, the purchaser will not be indemnified and may become responsible for payment of the new land tax payable amount.

Should a reassessment occur after this Certificate has been paid in full and the Certificate is subsequently updated, the purchaser will not be indemnified and may become responsible for payment of the new land tax payable amount.

Provision of this Certificate does not relieve the land owner of their responsibility to pay their Notice of Land Tax Assessment by the due date.

For more information:

Visit:	www.revenuesa.sa.gov.au
Email:	contactus@revenuesa.sa.gov.au
Phone:	(08) 8372 7534

PAYMENT OPTIONS FOR THIS CERTIFICATE SHOWN BELOW

Biller Code: 456293 **Ref: 7024099421** Contact your bank or financial institution to make this payment from your cheque, savings, debit, credit card or transaction account. More info: www.bpay.com.au ® Registered to BPAY Pty Ltd ABN 69 079 137 518	**To pay via the internet go to:** www.revenuesaonline.sa.gov.au	Send your cheque or money order, made payable to the **Commissioner of State Taxation**, along with this **Payment Remittance Advice** to: **Please refer below.** **Revenue SA** **Locked Bag 555** **ADELAIDE SA 5001**

ACTION REQUIRED: In line with the Commonwealth Government's cheque phase-out, RevenueSA will stop accepting cheque payments after 30 June 2027. To ensure a smooth transition, we encourage you to switch to one of the other payment options listed above.

STATE PLANNING COMMISSION

Contact	*Planning Services*
Email	*Dhud.planningservices@sa.gov.au*
Phone:	*7133 3030*

Level 10
83 Pirie Street
Adelaide SA 5000

GPO Box 1815
Adelaide SA 5001

1800 752 664
saplanningcommission@sa.gov.au

21 September 2026

Bertram Form 1 Shop Pty Ltd
GPO Box 448
ADELAIDE SA 5001

Dear Sir/Madam

Re: ***Land and Business (Sale and Conveyancing) Act 1994*** **- Section 7 Enquiry**
Property at Unit 23, 58 King William Street, Kent Town
Registered Proprietor(s): D Keegan and another

I refer to your enquiry to the Department for Housing and Urban Development (DHUD) concerning the parcel of land comprised in Certificate of Title Volume 6200 Folio 70 and the subsequent Property Interest Report (PIR) issued. (Reference No. 2818406 dated 15/9/26).

The land is the subject of an application for development which was granted approval, subject to certain conditions by the Development Assessment Commission pursuant to the *Development Act 1993 (repealed)*. A copy of the Planning Decision Notification is attached (refer item 5.1 of PIR).

There is no record of any condition that continues to apply under either of the repealed Acts referred to in item 6.1 of the PIR.

There is also no record of any condition that continues to apply under the *Planning, Development and Infrastructure Act 2016* (refer item 29.2 of the PIR).

Yours faithfully

Planning Services Unit
on behalf of
STATE PLANNING COMMISSION

South Australia - Regulation 42 under the Development Act 1993

DECISION NOTIFICATION FORM

Contact Officer: Concetta Parisi
Telephone: 8303 0660
KNET Reference: 2014/12390/01

Development Number:
155/M002/14

FOR DEVELOPMENT APPLICATION

DATED: 6 June 2014
REGISTERED ON: 6 June 2014

TO: FA Marmac Pty Ltd
c/- Ruan Consulting
PO Box 3099
Norwood SA 5067
EMAIL: ruan@ruanconsulting.com.au

LOCATION OF PROPOSED DEVELOPMENT:

Street No	Section	Street	Suburb	Hundred	Title Reference
54-60		King William Street	KENT TOWN	Adelaide	CT5720/848 CT5192/227 CT5088/529 CT5088/528

NATURE OF PROPOSED DEVELOPMENT:
Demolition of existing buildings and structures including one Local Heritage place, removal of a Regulated Tree and construction of a mixed use development comprising 54 residential dwellings, 3 SoHo products, a retail store and commercial offices together with above ground car parking and related works

From: **DEVELOPMENT ASSESSMENT COMMISSION**

In respect of this proposed development you are informed that:

NATURE OF DECISION	CONSENT GRANTED	NO. OF CONDITIONS	CONSENT REFUSED	NOT APPLICABLE
Development Plan Consent	Yes	9	N/A	N/A
Building Rules Consent				
DEVELOPMENT APPROVAL	**STILL REQUIRED**			

Any conditions imposed are set out on the attached sheet.

Details of the building classification and the approved number of occupants under the Building Code are attached.

0 representation[s] from third parties concerning your Category 2 proposal were received.

No work can commence on this development unless a Development Approval has been obtained. If one or more consents have been granted on this Notification Form, you must not start any site works or building work or change the use of the land until you have also received notification of a Development Approval.

Mark Adcock
PRINCIPAL PLANNER - DAC
as delegate of the
DEVELOPMENT ASSESSMENT COMMISSION
Date of Decision: 31 July 2014
[3] **Sheets Attached**

DEVELOPMENT APPLICATION - 155/M002/14

Planning Conditions

1. Except where minor amendments may be required by other relevant Acts, or by conditions imposed by this application, the development shall be established in strict accordance with the details and plans, as submitted in Development Application 155/M002/14 including:

   Plans by Proske Architects

Plan No.	Revision	Date
13.071.PL01.A	A	2 June 2014
13.071.PL02.A	A	4 June 2014
13.071.PL03.B	B	12 June 2014
13.071.PL04.A	A	4 June 2014
13.071.PL05.A	A	4 June 2014
13.071.PL06.A	A	4 June 2014
13.071.PL07.A	A	4 June 2014
13.071.PL08.A	A	4 June 2014
13.071.PL09.A	A	2 June 2014
13.071.PL010.A	A	4 June 2014
13.071.PL011.A	A	4 June 2014

   Reports / Correspondence

   - Planning Assessment Report in support of the development (June 2014) – Final Version, Revision 2B.

2. The acoustic attenuation measures recommended in the Resonate report, ref A1149192, dated 12 May 2014, forming part of this consent shall be undertaken within the Development to the reasonable satisfaction of the Development Assessment Commission. Such acoustic measures shall be made operational prior to the occupation or use of the Development and any additional measures implemented as required when plant and equipment details are finalised.

3. Mechanical plant or equipment, shall be designed, sited and screened to minimise noise impact on adjacent premises or properties to the satisfaction of the Development Assessment Commission.

4. A Construction Environment Management Plan (CEMP) shall be prepared and implemented in accordance with current industry standards – including the EPA publication “Environmental Management of On-site Remediation” - to minimise environmental harm and disturbance during construction.

   The management plan must incorporate, without being limited to, the following matters:

   4.1 air quality, including odour and dust

   4.2 surface water including erosion and sediment control

   4.3 soils, including fill importation, stockpile management and prevention of soil contamination

   4.4 groundwater, including prevention of groundwater contamination

   4.5 noise

   4.6 occupational health and safety

For further information relating to what Site Contamination is, refer to the EPA Guideline: *'Site Contamination – what is site contamination?'*: www.epa.sa.gov.au/pdfs/guide_sc_what.pdf

A copy of the CEMP shall be provided to the prior to the commencement of site works.

5. All stormwater design and construction shall be in accordance with Australian Standards and recognised engineering best practices to ensure that stormwater does not adversely affect any adjoining property or public road.

6. The proposed car parking layout shall be designed and constructed to conform to the *Australian Standard 2890.1:2004 for Off-Street Parking Facilities*; *Australian Standard 2890.6-2009 Parking facilities.*

7. The on-site Bicycle Parking facilities shall be designed in accordance with Australian Standard 2890.3-1993 and the AUSTROADS, Guide to Traffic Engineering Practice Part 14 – Bicycles.

8. Prior to Provisional Building Rules consent, the local heritage place house shall be measured (plans and elevations) and photographically recorded at the applicant's expense to the satisfaction of Council and a copy be provided to Council.

9. The proposed landscaping shall be established and maintained to the satisfaction of the Development Assessment Commission.

Advisory Notes:

a) The approval does not include any signage (other than directional), which would need to be the subject of a separate application to the relevant planning authority.

b) The applicant is reminded of its general environmental duty, as required by Section 25 of the *Environment Protection Act 1993*, to take all reasonable and practical measures to ensure that the activities on the whole site, including during construction, do not pollute the environment in a way which causes or may cause environmental harm.

c) Any information sheets, guidelines documents, codes of practice, technical bulletins etc. that are referenced in this response can be accessed on the following web site: http://www.epa.sa.gov.au/pub.html

d) The applicant must ensure there is no objection from any of the public utilities in respect of underground or overhead services and any alterations that may be required are to be at the applicant's expense.

e) As work is being undertaken on or near the boundary, the applicant should ensure that the boundaries are clearly defined, by a Licensed Surveyor, prior to the commencement of any building work.

f) The emission of noise from the premises is subject to control under the Environment Protection Act and Regulations, 1993 and the applicant (or person with the benefit of this consent) should comply with those requirements.

g) That the air conditioning or air extraction plant or ducting shall be screened such that no nuisance or loss of amenity is caused to residents and users of properties

in the locality to the reasonable satisfaction of the Development Assessment Commission.

h) The development must be substantially commenced within three (3) years of the date of this Notification, unless this period has been extended by the Development Assessment Commission.

i) An application for an authorisation pursuant to Section 22.1 of the Local Government Act will need to lodged and approved by the City of Norwood, Payneham and St Peters for any encroachments.

j) You are also advised that any act or work authorised or required by this Notification must be completed within five (5) years of the date of the Notification unless this period is extended by the Commission.

k) You will require a fresh consent before commencing or continuing the development if you are unable to satisfy these requirements.

l) You have a right of appeal against the conditions which have been imposed on this Development Plan Consent or Development Approval. Such an appeal must be lodged at the Environment, Resources and Development Court within two months of the day on which you receive this notice or such longer time as the Court may allow. Please contact the Court if you wish to appeal. The Court is located in the Sir Samuel Way Building, Victoria Square, Adelaide, (telephone number 8204 0300).



Mark Adcock
PRINCIPAL PLANNER - DAC
as delegate of the
DEVELOPMENT ASSESSMENT COMMISSION
q:\development_assessment\resources\dab\standard letter templates\c_land_use\dac_decision\4_decision\1_decision notification form.doc

IMPORTANT NOTICE

SMOKE ALARM LEGISLATION

Legislation relating to smoke alarms came into force on the 1st day of February 1998.

- If the home you are purchasing was built on or after the 1st January 1995, then it should already have an operational mains powered smoke alarm installed. If not, it is the responsibility of the vendor to install it prior to settlement at the vendor's cost.

- If the home was built prior to 1st January 1995, but purchased by the vendor on or after 1st February 1998, then it should already have either an operational mains powered smoke alarm installed, or one powered by 10 year life, non-replaceable, non-removable permanently connected batteries. Again, it is the responsibility of the vendor to install such an alarm prior to settlement, and at the vendor's cost.

- In all other cases, the home you are buying must have at least, a battery operated smoke alarm which you are required to upgrade to mains power (or an alarm fitted with 10 year life, non-replaceable, non-removable permanently connected batteries) within six months of the date of purchase. It is recommended that at least one smoke alarm be installed on each floor of a multi storey dwelling.

The smoke alarms must be installed by a licensed electrician and must comply with the Australian Standard. A maximum penalty of $750.00 for a breach of the legislation applies.

Besides this penalty, there is also a risk that damage caused by fire to a dwelling, which does not have a smoke alarm installed as required under the legislation, may not be covered by insurance.

****